# ONE RIVER RUN

75 HUNKI DORI CT.
KEYSTONE, CO 80435

PERMIT / CONSTRUCTION
VOLUME 1

2020-06-25

## VICINITY MAP

## GRAPHIC STANDARDS

| | | | |
|---|---|---|---|
| # | POUND(S) or NUMBER | MATL | MATERIAL |
| & | AND | MAX | MAXIMUM |
| < | ANGLE | MB | MOISTURE BARRIER |
| @ | AT | MECH | MECHANICAL |
| A/V | AUDIO/VISUAL | MED | MEDIUM |
| AB | ANCHOR BOLT | MEMB | MEMBRANE |
| ABV | ABOVE | MEP | MECHANICAL, ELECTRICAL and PLUMBING |
| ACOUS | ACCOUSTICAL | MEZZ | MEZZANINE |
| ACT | ACCOUSTICAL CEILING TILE | MFR | MANUFACTURER |
| AD | AREA DRAIN or ACCESS DOOR | MH | MANHOLE |
| ADD | ADDENDUM | MIN | MINIMUM |
| ADJ | ADJACENT or ADJUSTABLE | MIRR | MIRROR |
| AFF | ABOVE FINISHED FLOOR | MISC | MISCELLANEOUS |
| AGG | AGGREGATE | MM | MILLIMETERS |
| AHU | AIR HANDLING UNIT | MO | MASONRY OPENING |
| ALT | ALTERNATE | MTD | MOUNT(ED) |
| ALUM | ALUMINUM | MTL | METAL |
| ANOD | ANODIZED | MUL | MULLION |
| APPROX | APPROXIMATE | (N) | NEW |
| ARCH | ARCHITECTURAL | N | NORTH |
| ASI | ARCHITECT'S SUPPLEMENTAL INSTRUCTIONS | NIC | NOT IN CONTRACT |
| | | NO | NUMBER |
| ASPH | ASPHALT | NOM | NOMINAL |
| AUTO | AUTOMATIC | NRC | NOISE REDUCTION COEFFICIENT |
| AVE | AVENUE | NTS | NOT TO SCALE |
| AVG | AVERAGE | OA | OVERALL |
| AWP | ACOUSTICAL WALL PANEL | OC | ON CENTER |
| B | BASE | OD | OUTSIDE DIAMETER |
| B.O. | BY OWNER | OF | OUTSIDE FACE |
| B.O.F. | BY OWNER, FUTURE | OFF | OFFICE |
| BD | BOARD | OH | OPPOSITE HAND |
| BIT | BITUMINOUS | OPNG | OPENING |
| BLDG | BUILDING | OPP | OPPOSITE |
| BLKG | BLOCKING | OTO | OUTSIDE-TO-OUTSIDE |
| BM | BEAM or BENCH MARK | P | PAINT(ED) |
| BOT | BOTTOM | P/L | PROPERTY LINE |
| BRG | BEARNING | PAC | PREVIOUSLY AWARDED CONTRACT |
| BSMT | BASEMENT | PAR | PARALLEL |
| C | CAULKING | PBO | PROVIDED BY OTHERS |
| C.L. | CENTERLINE | PC | PRECAST |
| CAB | CABINET | PERF | PERFORATED |
| CATV | CABLE TELEVISION | PERIM | PERIMETER |
| CCD | CONSTRUCTION CHANGE DIRECTIVE | PKG | PARKING |
| CCTV | CLOSED CIRCUIT TELEVISION | PL | PLATE |
| CDOT | COLORADO DEPARTMENT OF TRANSPORTATION | PLAM | PLASTIC LAMINATE |
| | | PLAS | PLASTER |
| CEM | CEMENTITIOUS | PLBG | PLUMBING |
| CFL | COUNTERFLASHING | PLYWD | PLYWOOD |
| CG | CORNER GUARD | PNL | PANEL |
| CIP | CAST IN PLACE | POL | POLISHED |
| CIRC | CIRCUMFERENCE | PR | PAIR or PROPOSAL REQUEST |
| CJ | CONTROL JOINT | PREFAB | PREFABRICATED |
| CK | CORK TILE | PREFIN | PREFINISHED |
| CL | COLUMN LINE | PRESTR | PRESTRESSED |
| CLG | CEILING | PRIM | PRIMARY |
| CLOS | CLOSET | PROJ | PROJECT |
| CLR | CLEAR | PSF | POUNDS PER SQUARE FOOT |
| CM | CENTIMETERS | PSI | POUNDS PER SQUARE INCH |
| CMU | CONCRETE MASONRY UNIT | PT | POST TENSIONED or PORCELAIN TILE |
| CO | CHANGE ORDER or CLEANOUT | PT | POINT OF TANGENCY |
| COL | COLUMN | PTD | PAPER TOWEL DISPENSER |
| CONC | CONCRETE | PTDR | PAPER TOWEL DISPENSER AND RECEPTACLE |
| CONF | CONFERENCE | | |
| CONN | CONNECTION | PTN | PARTITION |
| CONSTR | CONSTRUCTION | PTR | PAPER TOWEL RECEPTACLE |
| CONT | CONTINUOUS | PVC | POLYVINYL CHLORIDE |
| CONTR | CONTRACTOR | PVMT | PAVEMENT |
| CORR | CORRIDOR or CORRUGATED | QT | QUARRY TILE |
| CPT | CARPET | QTY | QUANTITY |
| CT | CERAMIC TILE | (R) | REMOVE |
| CTR | COUNTER | R | RISER |
| CU | CUBIC | RAD | RADIUS |
| CY | CUBIC YARD | RB | RUBBER BASE |
| DAMP | DAMPPROOFING | RBC | RUBBER BASE COVE |
| DBL | DOUBLE | RBS | RUBBER BASE STRAIGHT |
| DEG | DEGREE | RBT | RUBBER TILE |
| DEMO | DEMOLISH or DEMOLITION | RD | ROOF DRAIN or ROAD |
| DEPT | DEPARTMENT | RE | REFER TO or REFERENCE |
| DF | DRINKING FOUNTAIN | REC | RECESS(ED) |
| DIA | DIAMETER | RECPT | RECEPTACLE |
| DIAG | DIAGONAL | REF | REFRIGERATOR or REFRIGERATED |
| DIM | DIMENSION | REINF | REINFORCED |
| DISP | DISPENSER | REQD | REQUIRED |
| DIV | DIVISION | RESIL | RESILIENT |
| DN | DOWN | REV | REVISE, REVISED or REVISION(S) |
| DR | DOOR | RF | RESILIENT FLOORING |
| DS | DOWNSPOUT | RFG | ROOFING |
| DTL | DETAIL | RFL | REFLECTED |
| DWG | DRAWING | RH | RIGHT HAND |
| DWR | DRAWER | RL | RAIN LEADER |
| (E) | EXISTING | RM | ROOM |
| E | EAST | RO | ROUGH OPENING |
| EA | EACH | ROD | ROOF OVERFLOW DRAIN |
| EB | EXPANSION BOLT | ROW | RIGHT OF WAY |
| ED | EXHAUST DUCT | RPM | REVOLUTIONS PER MINUTE |
| EF | EXHAUST FAN or EACH FACE | RVS | REVERSE (SIDE) |
| EJ | EXPANSION JOINT | RWC | RAIN WATER CONDUCTOR |
| EL | ELEVATION | S | SOUTH or SEALED |
| ELEC | ELECTRICAL | SC | SOLID CORE |
| ELEV | ELEVATOR | SCD | SEAT COVER DISPENSER |
| EMER | EMERGENCY | SCHED | SCHEDULE |
| ENGR | ENGINEER | SD | SOAP DISPENSER |
| EOS | EDGE OF SLAB | SEC | SECTION |
| EQ | EQUAL | SF | SQUARE FEET |
| EQUIP | EQUIPMENT | SHT | SHEET |
| ES | EACH SIDE | SHTG | SHEATHING |
| EST | ESTIMATE | SHWR | SHOWER |
| EW | EACH WAY | SIM | SIMILAR |
| EWC | ELECTRIC WATER COOLER | SNC | SANITARY NAPKIN CABINET |
| EWH | ELECTRIC WATER HEATER | SND | SANITARY NAPKIN DISPENSER |
| EXT | EXTERIOR | SNR | SANITARY NAPKIN RECEPTACLE |
| F | FARENHEIT | SOFF | SOFFIT |
| FA | FIRE ALARM | SPECS | SPECIFICATION(S) |
| FAC | FIRE ALARM CABINET | SPKL | SPRINKLER |
| FACP | FIRE ALARM CONTROL PANEL | SPKR | SPEAKER |
| FBO | FURNISHED BY OTHER(S) | SPRT | SUPPORT |
| FD | FLOOR DRAIN or FIRE DAMPER | SQ | SQUARE |
| FDN | FOUNDATION | SR | SINK RECEPTACLE |
| FE | FIRE EXTINGUISHER | SS | STAINLESS STEEL or SOLID SURFACE |
| FEC | FIRE EXTINGUISHER CABINET | SSK | SERVICE SINK |
| FF | FINISHED FLOOR | STA | STATION |
| FFL | FINISHED FLOOR LINE | STD | STANDARD |
| FH | FIRE HYDRANT | STL | STEEL |
| FHC | FIRE HOSE CABINET | STOR | STORAGE |
| FHMS | FLAT HEAD MACHINE SCREW | STRUCT | STRUCTURE or STRUCTURAL |
| FHV | FIRE HOSE VALVE | SUSP | SUSPEND(ED) |
| FHWS | FLAT HEAD WOOD SCREW | SYM | SYMMETRICAL |
| FIN | FINISH(ED) | SYS | SYSTEM |
| FIXT | FIXTURE | T | TREAD |
| FLG | FLASHING | T&B | TOP AND BOTTOM |
| FLR | FLOOR(ING) | T&G | TONGUE AND GROOVE |
| FLUOR | FLUORESCENT | TB | TOWEL BAR |
| FOC | FACE OF CONCRETE | TBC | TOP OF BACK OF CURB |
| FOF | FACE OF FINISH | TELE | TELEPHONE |
| FOM | FACE OF MASONRY | TEMP | TEMPORARY or TEMPERATURE |
| FOS | FACE OF STUD | TG | TEMPERED GLASS |
| FR | FIRE RESISTIVE or FIRE RATED | THERM | THERMOSTAT |
| FRP | FIBERGLASS REINFORCED PANEL(ING) | THK | THICK or THICKNESS |
| FRT | FIRE RETARDANT TREATED | THLD | THRESHOLD |
| FT | FOOT (FEET) | TO | TOP OF |
| FTG | FOOTING | TOC | TOP OF CONCRETE |
| FURN | FURNISH(ED) | TOS | TOP OF STEEL |
| FURR | FURRED or FURRING | TOW | TOP OF WALL |
| FUT | FUTURE | TPD | TOILET PAPER DISPENSER |
| FVC | FIRE VALVE CABINET | TPTN | TOILET PARTITION |
| GA | GAUGE | TS | TUBE STEEL |
| GALV | GALVANIZED | TV | TELEVISION |
| GB | GRAB BAR | TYP | TYPICAL |
| GC | GENERAL CONTRACTOR | UL | UNDERWRITER'S LABORATORY |
| GCMU | GLAZED CONCRETE MASONRY UNIT(S) | UNFIN | UNFINISHED |
| GI | GALVANIZED IRON | UNO | UNLESS NOTED OTHERWISE |
| GL | GLASS or GLAZING | UOS | UNLESS OTHERWISE SPECIFIED |
| GND | GROUND | UR. | URINAL |
| GR | GRADE | USGS | U.S. GEOLOGICAL SURVEY |
| GRT | GROUT | V | VOLT |
| GT | GLASS TILE | VAR | VARY or VARIES |
| GWB | GYPSUM WALLBOARD | VB | VAPOR BARRIER |
| GYP | GYPSUM | VCT | VINYL COMPOSITION TILE |
| GYP. BD. | GYPSUM BOARD | VENT | VENTILATION |
| HAS | HEADED ANCHOR STUD | VER | VERIFY |
| HB | HOSE BIB | VERT | VERTICAL |
| HC | HOLLOW CORE or HANDICAPPED | VEST | VESTIBULE |
| HDAS | HEADED DEFORMED ANCHOR STUD | VIF | VERIFY IN FIELD |
| HDR | HEADER | VIN | VINYL or SHEET VINYL |
| HDWR | HARDWARE | VOL | VOLUME |
| HM | HOLLOW METAL | VTR | VENT THROUGH ROOF |
| HORIZ | HORIZONTAL | VWC | VINYL WALL COVERING |
| HR | HOUR | W | WEST or WIDE |
| HT | HEIGHT | W.O. | WHERE OCCURS |
| HTR | HEATER | W/ | WITH |
| HVAC | HEATING, VENTILATION and AIR CONDITIONING | W/C | WATER CLOSET |
| | | W/O | WITHOUT |
| HW | HOT WATER | W/R | WATER RESISTANT |
| HWH | HOT WATER HEATER | WC | WALL COVERING |
| HWY | HIGHWAY | WD | WOOD |
| IBC | INTERNATIONAL BUILDING CODE or INSTALLED BY CONTRACTOR | WDO | WINDOW |
| | | WF. | WIDE FLANGE or WOOD FLOORING |
| ID | INSIDE DIAMETER | WGL | WIRE GLASS |
| IN | INCH(ES) | WP | WATERPROOF(ING) |
| INCAND | INCANDESCENT | WPT | WORKING POINT |
| INCL | INCLUD(ED) | WSCT | WAINSCOT |
| INFO | INFORMATION | WT | WEIGHT |
| INSUL | INSULATION or INSULATED | WWF | WELDED WIRE FABRIC |
| INT | INTERIOR | YD | YARD |
| INTMED | INTERMEDIATE | | |
| INV | INVERT | | |
| JC | JANITOR CLOSET | | |
| JST | JOIST | | |
| JT | JOINT | | |
| KD | KNOCKDOWN | | |
| KIT | KITCHEN | | |
| KO | KNOCKOUT | | |
| KP | KICK PLATE | | |
| LAB | LABORATORY | | |
| LAM | LAMINATE | | |
| LAV | LAVATORY | | |
| LBL | LABEL | | |
| LDR | LEADER | | |
| LH | LEFT HAND | | |
| LKR | LOCKER | | |
| LLH | LONG LEG HORIZONTAL | | |
| LLV | LONG LEG VERTICAL | | |
| LP | LIGHTING PANEL or LIGHT PROOF | | |
| LT | LIGHT | | |
| LTL | LINTEL | | |
| LVR | LOUVER | | |
| MACH | MACHINERY | | |
| MAG | MAGNETIC | | |
| MAS | MASONRY | | |

## GENERAL NOTES

| PROJECT NOTES | |
|---|---|
| 1 | THE TERM "GC" SHALL MEAN THE GENERAL CONTRACTOR AND ITS SUB-CONTRACTORS. |
| 2 | THE GC SHALL THOROUGHLY FAMILIARIZE ITSELF WITH THE CONTRACT DOCUMENTS AND THE SITE. SHOULD THE GC FIND DISCREPANCIES IN, OR OMISSIONS FROM THE DRAWINGS OR SPECIFICATIONS, SHOULD THE GC BE IN DOUBT AS TO THEIR INTENT OR MEANING, OR HAS QUESTIONS CONCERNING CONSTRUCTABILITY OR CODE COMPLIANCE, THE GC SHALL SEEK CLARIFICATION FROM THE ARCHITECT BEFORE PROCEEDING WITH THE WORK. SHOULD A CONFLICT OCCUR BETWEEN THE DRAWINGS AND SPECIFICATIONS THAT IMPLYING GREATER QUANTITY OR QUALITY SHALL PREVAIL. |
| 3 | THE INTENT OF THE CONTRACT DOCUMENTS IS TO PROVIDE A COMPLETE PROJECT. EVERY ITEM NECESSARILY REQUIRED MAY NOT BE SPECIFICALLY MENTIONED OR SHOWN. UNLESS EXPRESSLY STATED, SYSTEMS AND EQUIPMENT SHALL BE COMPLETELY OPERATIONAL. PROVIDE INCIDENTAL, ACCESSORY, AND ANY OTHER ITEMS NOT SPECIFIED, BUT REQUIRED, FOR A COMPLETE AND FINISHED ASSEMBLY. |
| 4 | THE ENTIRE SET OF CONTRACT DOCUMENTS REPRESENT THE PROJECT AS A WHOLE. THE GC IS RESPONSIBLE FOR PROVIDING SUFFICIENT INFORMATION TO ITS SUB-CONTRACTORS TO DETERMINE AND PERFORM THEIR SCOPE OF WORK. |
| 5 | ANY ELECTRONIC CAD AND/OR BUILDING INFORMATION MODELING (BIM) FILES PROVIDED BY THE ARCHITECT OR ITS CONSULTANTS IS SOLELY TO ASSIST THE GC IN PREPARATION OF SHOP DRAWINGS AND/OR LAYOUT OF THE PROJECT. CAD AND BIM FILES ARE NOT A PART OF THE CONTRACT DOCUMENTS AND ANY INFORMATION CONTAINED THEREIN DOES NOT SUPERSEDE ANY INFORMATION ON THE CONTRACT DOCUMENTS. |
| 6 | THE GC IS RESPONSIBLE FOR MEANS AND METHODS OF CONSTRUCTION, COORDINATION OF TRADES, AND SCHEDULING OF THE WORK. |
| 7 | THE GC SHALL NOT REVISE, SUBSTITUTE, OR CHANGE THE WORK WITHOUT THE WRITTEN CONSENT OF THE ARCHITECT. |
| 8 | NOT EVERY CONDITION MAY BE DRAWN OR DETAILED. CONDITIONS SIMILAR TO DETAILED CONDITIONS SHALL BE CONSTRUCTED TO THE SAME SIZE AND CHARACTER AS THOSE FOR SIMILAR CONDITIONS. |
| 9 | THE GC SHALL FOLLOW THE RECOMMENDATIONS OF THE OWNER'S GEOTECHNICAL CONSULTANT. SHOULD THE GC FIND DISCREPANCIES WITH THE CONTRACT DOCUMENTS, THE GC SHALL SEEK CLARIFICATION FROM THE ARCHITECT BEFORE PROCEEDING WITH THE WORK. |
| 10 | DO NOT SCALE DRAWINGS. |
| 11 | PROVIDE NECESSARY BLOCKING IN WALLS, PARTITIONS, AND CEILINGS FOR ITEMS INCLUDING, BUT NOT LIMITED TO: CEILING AND PARTITION-MOUNTED FIXTURES, GRAB BARS, HANDRAILS, TOILET ACCESSORIES, CABINETRY, PANELING, COUNTERTOPS, SHELVES, CLOSET RODS, WHITE BOARDS, AND DECORATIVE ELEMENTS. |
| 12 | THE CONSTRUCTION DOCUMENTS ARE THE PROPERTY OF OZ ARCHITECTURE, INC. AND ITS CONSULTANTS AND ARE TO BE USED AS INSTRUMENTS OF SERVICE FOR CONSTRUCTION OF THIS PROJECT ONLY. USE OF THESE DOCUMENTS BY THE GC FOR ANY OTHER PROJECT OR PURPOSE WITHOUT THE WRITTEN CONSENT OF OZ ARCHITECTURE IS PROHIBITED. |

## GRAPHIC STANDARDS

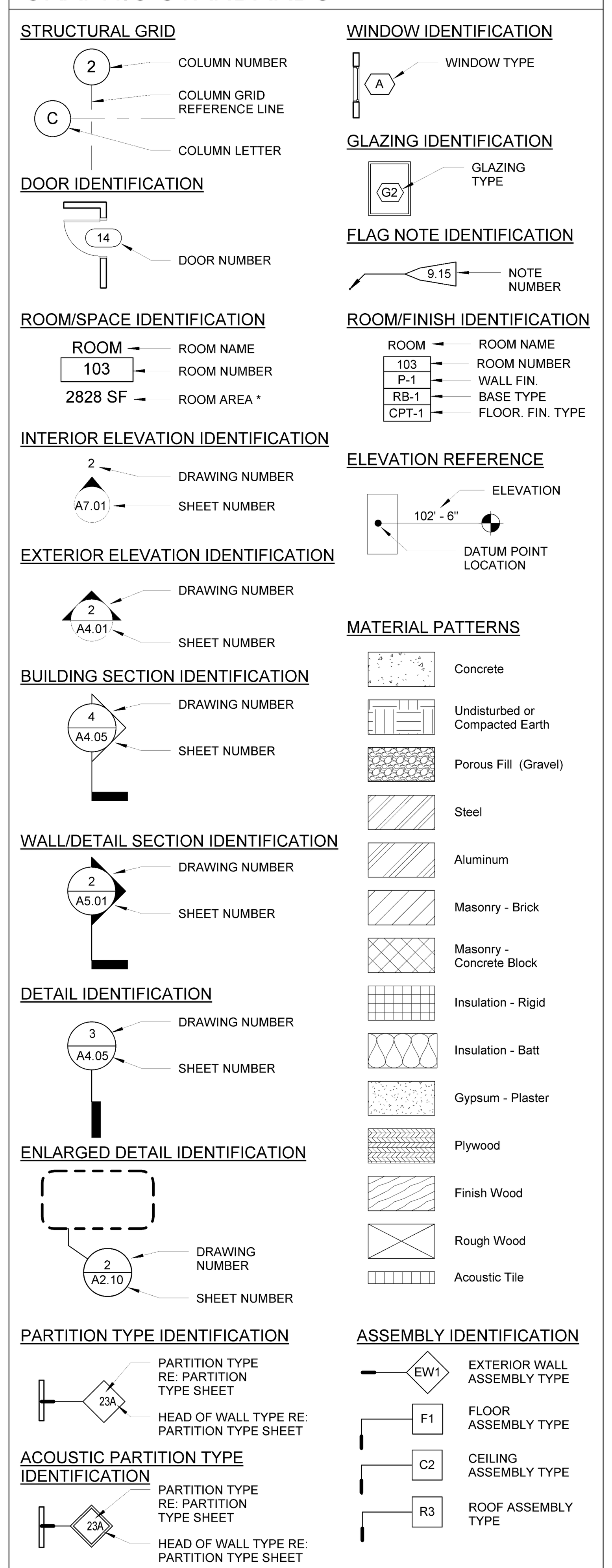


* ROOM AREAS: VERIFY BASIS OF MEASUREMENT USED BY ARCHITECT. MAY BE CALCULATED TO CENTERLINE OF SURROUNDING PARTITIONS OR TO INSIDE FINISH SURFACES

## PROJECT TEAM

**OWNER**
One River Run Acquisition, LLC
123 West Main Street, Suite D
Aspen, CO 81611
VOICE: 970.948.3435
Scott Russell

**OWNER**
Two Roads Development LLC
2900 NE 7th Ave, TH 103
Miami, Florida 33137
VOICE: 305.767.1359
Greg Stepp

**OWNER REP**
Real Estate Development & Construction Consulting
VOICE: 970.389.2663
Todd Morgan

**CIVIL**
Tetra Tech EC, Inc
130 Ski Hill Road
Breckenridge, CO 80424
VOICE: 970.453.6394
Chris Durloo

**LANDSCAPE**
Norris Design, Inc.
P.O. Box 2320
Frisco, CO 80443
VOICE: 970.368.7068
Brandi Rice

**POOL CONSULTANT**
Cloward H20
2696 N University Ave, #290
Provo, UT 84604
VOICE: 801.375.1223 ext. 211
Joseph Adams

**STRUCTURAL**
KL&A
1717 Washington Ave
Golden, CO 80401
VOICE: 303.384.9910
Bob Redwine

**ARCHITECT**
OZ Architecture
3003 Larimer Street
Denver, CO 80205
VOICE: 303.861.5704
Greg Lemon

**MEP**
BG Buildingworks
1626 Cole Boulevard
Ste. 300; Building 7
Lakewood, CO 80401
VOICE: 303.278.3820
Brad Staver

**LIGHTING CONSULTANT**
Cullen Lighting Studio, LLC
379 Cherokee Ave,
Superior, CO 80027
VOICE: 720.441.4020
Kate Cullen

**SPECIFICATIONS**
IBIM Solutions
5728 S. Gallup Street
Littleton, CO 80120
VOICE: 303.794.4920
Greg Markling

**SNOW CONSULTANT**
Snow Country Consultants Ltd.
#3-8030 Nicklaus North Boulevard
Whistler, BC
Canada, V0N 1B8
VOICE: 604.932.3874
Jonathan Paine

**CONTRACTOR**
Haselden Construction
6950 South Potomac St
Centennial, CO 80112
VOICE: 303.728.3883
Dan Bates

**ENVELOPE CONSULTANT**
SBSA
5926 McIntyre Street
Golden, CO 80403
VOICE: 303.425.7272

**CODE CONSULTANT**
Colorado Code Consulting LLC
4610 S Ulster Street, Suite 150
Denver, CO 80237
VOICE: 303.400.6564
Steve Thomas

**XCEL ENERGY MODELING**
Group14 Engineering
1325 E 16th Ave.
Denver, CO 80218
VOICE: 303.861.2070
Taylor Roberts

| # | Sheet Number | Sheet Name | SD 2019-12-20 | 50% DD 2020-02-06 | 100% DD 2020-04-09 | PERMIT SET 2020-06-25 |
|---|---|---|---|---|---|---|
| | GENERAL | | | | | |
| | G-000 | ONE RIVER RUN COVER VOLUME 1 | X | X | X | X |
| | CIVIL | | | | | |
| | C-100 | LEGEND & ABBREVIATIONS | X | X | X | X |
| | C-101 | EXISTING CONDITIONS PLAN | X | X | X | X |
| | C-102 | DEMOLITION PLAN | X | X | X | X |
| | C-103 | EROSION CONTROL & CONSTRUCTION STAGING PLAN | X | X | X | X |
| | C-104 | CIVIL SITE PLAN | X | X | X | X |
| | C-105 | OVERALL GRADING & DRAINAGE PLAN | X | X | X | X |
| | C-106 | DETAILED GRADING AND DRAINAGE PLAN | X | X | X | X |
| | C-107 | DETAILED GRADING AND DRAINAGE PLAN | X | X | X | X |
| | C-108 | DETAILED GRADING AND DRAINAGE PLAN | X | X | X | X |
| | C-109 | COMPOSITE UTILITY PLAN | X | X | X | X |
| | C-110 | WETLAND SETBACK DISTURBANCE EXHIBIT | | | X | X |
| | C-111 | FIRE ACCESS EXHIBIT | | | X | X |
| | C-112 | SNOW STORAGE PLAN | | | | X |
| | C-113 | CONCRETE PAVING JOINT LAYOUT PLAN | | | | X |
| | C-201 | HUNKI DORI COURT PLAN & PROFILE | | | X | X |
| | C-202 | NORTH DRIVEWAY PLAN & PROFILE | | | X | X |
| | C-205 | SANITARY SEWER A PLAN & PROFILE | | | X | X |
| | C-206 | SANITARY SEWER A & B PLAN & PROFILE | | | X | X |
| | C-210 | WATER PLAN & PROFILE | | | X | X |
| | C-215 | STORM SEWER PLAN & PROFILE | | | X | X |
| | C-216 | STORM SEWER PLAN & PROFILE | | | X | X |
| | C-217 | STORM SEWER PLAN & PROFILE | | | X | X |
| | C-218 | STORM SEWER PLAN & PROFILE | | | X | X |
| | C-219 | STORM SEWER PLAN & PROFILE | | | X | X |
| | C-501 | CIVIL DETAILS | X | X | X | X |
| | C-502 | CIVIL DETAILS | X | X | X | X |
| | C-503 | CIVIL DETAILS | X | X | X | X |
| | C-504 | CIVIL DETAILS | X | X | X | X |
| | LANDSCAPE | | | | | |
| | L-001 | LANDSCAPE NOTES | X | X | X | X |
| | L-002 | LANDSCAPE SCHEDULES | X | X | X | X |
| | L-101 | HARDSCAPE LAYOUT PLAN - PLAZA LEVEL | X | X | X | X |
| | L-102 | HARDSCAPE ENLARGEMENT PLAN - PLAZA LEVEL | X | X | X | X |
| | L-201 | HARDSCAPE LAYOUT PLAN - LOBBY LEVEL | X | X | X | X |
| | L-301 | LANDSCAPE PLANTING PLAN - PLAZA LEVEL WEST | | X | X | X |
| | L-302 | LANDSCAPE PLANTING PLAN - PLAZA LEVEL EAST | | X | X | X |
| | L-401 | LANDSCAPE PLANTING PLAN - LOBBY LEVEL | | X | X | X |
| | L-501 | LANDSCAPE DETAILS | X | X | X | X |
| | L-502 | LANDSCAPE DETAILS | X | X | X | X |
| | L-503 | LANDSCAPE DETAILS | X | X | X | X |
| | I-001 | IRRIGATION NOTES | X | | | X |
| | I-101 | IRRIGATION PLAN - PLAZA LEVEL WEST | | | X | X |
| | I-102 | IRRIGATION PLAN - PLAZA LEVEL EAST | | | X | X |
| | I-201 | IRRIGATION PLAN - LOBBY LEVEL | | | X | X |
| | I-301 | IRRIGATION DETAILS | | | X | X |
| | I-302 | IRRIGATION DETAILS | | | X | X |
| | I-303 | IRRIGATION DETAILS | | | X | X |

| # | Sheet Number | Sheet Name | SD 2019-12-20 | 50% DD 2020-02-06 | 100% DD 2020-04-09 | PERMIT SET 2020-06-25 |
|---|---|---|---|---|---|---|
| | STRUCTURAL | | | | | |
| | S-001 | GENERAL NOTES | X | X | X | X |
| | S-002 | GENERAL NOTES | X | X | X | X |
| | S-003 | GENERAL NOTES | X | X | X | X |
| | S-010 | TYPICAL DETAILS | X | X | X | X |
| | S-011 | TYPICAL DETAILS | X | X | X | X |
| | S-012 | TYPICAL DETAILS | X | X | X | X |
| | S-013 | TYPICAL DETAILS | X | X | X | X |
| | S-014 | TYPICAL DETAILS | X | X | X | X |
| | S-015 | TYPICAL DETAILS | X | X | X | X |
| | S-016 | TYPICAL DETAILS | X | X | X | X |
| | S-017 | TYPICAL DETAILS | | | X | X |
| | S-020 | LOAD KEYS | | X | X | X |
| | S-021 | LOAD KEYS | | X | X | X |
| | S-022 | WIND LOAD KEY | | | | X |
| | S-030 | GRID PLAN | X | X | X | X |
| | S-100 | GARAGE FLOOR PLAN - OVERALL | | | X | X |
| | S-100A | GARAGE FOUNDATION PLAN - AREA A | X | X | X | X |
| | S-100B | GARAGE FOUNDATION PLAN - AREA B | X | X | X | X |
| | S-100C | GARAGE FOUNDATION PLAN - AREA C | X | X | X | X |
| | S-100D | GARAGE FOUNDATION PLAN - AREA D | X | X | X | X |
| | S-100E | GARAGE FOUNDATION PLAN - AREA E | X | X | X | X |
| | S-100F | GARAGE FOUNDATION PLAN - AREA F | | | X | X |
| | S-101 | LEVEL 1 FLOOR PLAN - OVERALL | | | X | X |
| | S-101.1A | LEVEL 1 FRAMING PLAN - AREA A | X | X | X | X |
| | S-101.1B | LEVEL 1 FRAMING PLAN - AREA B | X | X | X | X |
| | S-101.1C | LEVEL 1 FRAMING PLAN - AREA C | X | X | X | X |
| | S-101.1D | LEVEL 1 FRAMING PLAN - AREA D | X | X | X | X |
| | S-101.1E | LEVEL 1 FRAMING PLAN - AREA E | X | X | X | X |
| | S-101.1F | LEVEL 1 FRAMING PLAN - AREA F | | | X | X |
| | S-101.2A | LEVEL 1 TOP REINFORCING PLAN - AREA A | | | | X |
| | S-101.2B | LEVEL 1 TOP REINFORCING PLAN - AREA B | | | | X |
| | S-101.2C | LEVEL 1 TOP REINFORCING PLAN - AREA C | | | | X |
| | S-101.2D | LEVEL 1 TOP REINFORCING PLAN - AREA D | | | | X |
| | S-101.2E | LEVEL 1 TOP REINFORCING PLAN - AREA E | | | | X |
| | S-101.2F | LEVEL 1 TOP REINFORCING PLAN - AREA F | | | | X |
| | S-101.3A | LEVEL 1 BOTTOM REINFORCING PLAN - AREA A | | | | X |
| | S-101.3B | LEVEL 1 BOTTOM REINFORCING PLAN - AREA B | | | | X |
| | S-101.3C | LEVEL 1 BOTTOM REINFORCING PLAN - AREA C | | | | X |
| | S-101.3D | LEVEL 1 BOTTOM REINFORCING PLAN - AREA D | | | | X |
| | S-101.3E | LEVEL 1 BOTTOM REINFORCING PLAN - AREA E | | | | X |
| | S-101.3F | LEVEL 1 BOTTOM REINFORCING PLAN - AREA F | | | | X |
| | S-101.DA | LEVEL 1 DIMENSION PLAN - AREA A | | X | X | X |
| | S-101.DB | LEVEL 1 DIMENSION PLAN - AREA B | | X | X | X |
| | S-101.DC | LEVEL 1 DIMENSION PLAN - AREA C | | X | X | X |
| | S-101.DD | LEVEL 1 DIMENSION PLAN - AREA D | | X | X | X |
| | S-101.DE | LEVEL 1 DIMENSION PLAN - AREA E | | X | X | X |
| | S-101.DF | LEVEL 1 DIMENSION PLAN - AREA F | | | X | X |
| | S-102 | LEVEL 2 FLOOR PLAN - OVERALL | | | X | X |
| | S-102W | LEVEL 2 FRAMING PLAN - WEST BUILDING | X | X | X | X |
| | S-102H | LEVEL 2 FRAMING PLAN - HOTEL BUILDING | X | X | X | X |

| # | Sheet Number | Sheet Name | SD 2019-12-20 | 50% DD 2020-02-06 | 100% DD 2020-04-09 | PERMIT SET 2020-06-25 |
|---|---|---|---|---|---|---|
| | S-102E | LEVEL 2 FRAMING PLAN - EAST BUILDING | X | X | X | X |
| | S-102.2A | LEVEL 2 REINFORCING PLAN - AREA A | | | | X |
| | S-102.4A | LEVEL 2 BANDED PT PLAN - AREA A | | | | X |
| | S-102.5A | LEVEL 2 UNIFORM PT PLAN - AREA A | | | | X |
| | S-102.DW | LEVEL 2 DIMENSION PLAN - WEST BUILDING | | X | X | X |
| | S-102.DH | LEVEL 2 DIMENSION PLAN - HOTEL BUILDING | | X | X | X |
| | S-102.DE | LEVEL 2 DIMENSION PLAN - EAST BUILDING | | X | X | X |
| | S-103 | LEVEL 3 FLOOR PLAN - OVERALL | X | X | X | X |
| | S-103W | LEVEL 3 FRAMING PLAN - WEST BUILDING | | X | X | X |
| | S-103H | LEVEL 3 FRAMING PLAN - HOTEL BUILDING | X | X | X | X |
| | S-103E | LEVEL 3 FRAMING PLAN - EAST BUILDING | | X | X | X |
| | S-104 | LEVEL 4 FLOOR PLAN - OVERALL | X | X | X | X |
| | S-104W | LEVEL 4 FRAMING PLAN - WEST BUILDING | X | X | X | X |
| | S-104H | LEVEL 4 FRAMING PLAN - HOTEL BUILDING | X | X | X | X |
| | S-104E | LEVEL 4 FRAMING PLAN - EAST BUILDING | X | X | X | X |
| | S-105 | LEVEL 5 FLOOR PLAN - OVERALL | X | X | X | X |
| | S-105W | LEVEL 5 FRAMING PLAN - WEST BUILDING | X | X | X | X |
| | S-105H | LEVEL 5 FRAMING PLAN - HOTEL BUILDING | X | X | X | X |
| | S-105E | LEVEL 5 FRAMING PLAN - EAST BUILDING | X | X | X | X |
| | S-106W | LEVEL 6 FRAMING PLAN - WEST BUILDING | X | X | X | X |
| | S-107 | ROOF FRAMING PLAN - OVERALL | X | X | X | X |
| | S-107W | ROOF FRAMING PLAN - WEST BUILDING | X | X | X | X |
| | S-107H | ROOF FRAMING PLAN - HOTEL BUILDING | X | X | X | X |
| | S-107E | ROOF FRAMING PLAN - EAST BUILDING | X | X | X | X |
| | S-108W | ROOF LAYOUT PLAN - WEST BUILDING | X | X | X | X |
| | S-108H | ROOF LAYOUT PLAN - HOTEL BUILDING | X | X | X | X |
| | S-108E | ROOF LAYOUT PLAN - EAST BUILDING | | X | X | X |
| | S-200 | CORE ELEVATIONS | | X | X | X |
| | S-201 | CORE ELEVATIONS | X | X | X | X |
| | S-202 | CORE ELEVATIONS | X | X | X | X |
| | S-203 | CORE ELEVATIONS | X | X | X | X |
| | S-204 | CORE ELEVATIONS | X | X | X | X |
| | S-205 | CORE ELEVATIONS | X | X | X | X |
| | S-206 | CORE ELEVATIONS | | | X | X |
| | S-207 | CORE ELEVATIONS | | | X | X |
| | S-208 | CORE ELEVATIONS | | | X | X |
| | S-210 | FOUNDATION ELEVATIONS | | | X | X |
| | S-211 | FOUNDATION ELEVATIONS | | | X | X |
| | S-300 | BUILDING SECTIONS | X | X | X | X |
| | S-310 | PORTECOCHERE | | | X | X |
| | S-400 | PARTIAL PLAN - PODIUM POOL | | | | X |
| | S-410.1 | PARTIAL PLANS - LEVEL 2 | | | X | X |
| | S-410.2 | PARTIAL PLANS - LEVEL 2 | | | X | X |
| | S-500 | FOUNDATION DETAILS | X | X | X | X |
| | S-501 | FOUNDATION DETAILS | | | X | X |
| | S-502 | CONC PILASTER DETAILS | | | | X |
| | S-503 | CONC PILASTER DETAILS | | | | X |
| | S-510 | CONCRETE FRAMING DETAILS | X | X | X | X |
| | S-511 | CONCRETE FRAMING DETAILS | | | | X |
| | S-515 | FRAMING DETAILS | X | X | X | X |
| | S-516 | FRAMING DETAILS | | | | X |
| | S-520 | ROOF FRAMING DETAILS | X | X | X | X |
| | S-521 | ROOF FRAMING DETAILS | | | | X |
| | S-522 | ROOF FRAMING DETAILS | | | | X |
| | S-530 | ROOF FRAMING DETAILS | | | | X |
| | S-531 | ROOF FRAMING DETAILS | | | | X |
| | S-600 | SCHEDULES | | X | X | X |
| | S-605 | CONCRETE COLUMN SCHEDULE | | | | X |


OZ ARCHITECTURE®
3003 Larimer Street
Denver, Colorado 80205
phone 303.861.5704
www.ozarch.com


ONE RIVER RUN
75 HUNKI DORI CT.
KEYSTONE, CO 80435

PROJ. NO. 117033.00
DRAWN: OZ
CHECKED: OZ
APPROVED: OZ
DATE: 2020-06-25

© OZ ARCHITECTURE

ONE RIVER RUN

ISSUED FOR:
PERMIT / CONSTRUCTION

SHEET TITLE:
ONE RIVER RUN COVER VOLUME 1

SCALE: 12" = 1'-0"
SHEET NUMBER

G-000


C:\Revit Local Files\117033.00 OneRiverRun_A19_Central_kconley.rvt
6/23/2020 6:14:12 PM

## GENERAL NOTES

1. THE TYPE OF COMPACTION USED FOR THIS PROJECT WILL BE AASHTO T99 (ASTM 698). ALL COMPACTION TO COMPLY WITH GEOTECHNICAL ENGINEER RECOMMENDATIONS.
2. THE CONTRACTOR MUST KEEP ALL OPERATIONS, INCLUDING ALL EQUIPMENT, WITHIN THE DELINEATED TEMPORARY CONSTRUCTION FENCE AREAS AND LIMIT OF DISTURBANCE SHOWN IN PLANS UNLESS AUTHORIZED BY THE ENGINEER.
3. CONTRACTOR SHALL REPAIR OR REPLACE ANY UTILITIES OR IMPROVEMENTS, INCLUDING FENCES, SIGNS, CULVERTS AND ROADS, DAMAGED DURING EXECUTION OF THE WORK.
4. PROPERTY AND RIGHT OF WAY BOUNDARIES ARE BASED ON THE SURVEY PROVIDED BY PEAK LAND CONSULTANTS. ALL PROPERTY AND RIGHT OF WAY MARKERS ARE TO BE SURVEYED PRIOR TO DISTURBANCE OF ANY PROPERTY CORNER. CONTRACTOR MUST NOTIFY ENGINEER FOR VERIFICATION OF MONUMENT
5. SEE THE GEOTECHNICAL INVESTIGATION FOR ONE RIVER RUN BY CTL THOMPSON FOR GEOTECHNICAL REGULATIONS AND RECOMMENDATIONS FOR THIS PROJECT.
6. ALL TEMPORARY ROADWAY, DRIVEWAY, AND BIKE PATH PATCHING IS CONSIDERED INCIDENTAL TO THE CONTRACT. ALL TEMPORARY PATCHES MUST BE MAINTAINED BY THE CONTRACTOR.
7. WORKING HOURS SHALL BE PER THE SUMMIT COUNTY CODE SECTION 3512.04 B.
8. ALL TRAFFIC CONTROL DETAILS SHALL BE IN ACCORDANCE WITH THE MANUAL OF UNIFORM TRAFFIC CONTROL DEVICES LATEST EDITION WITH CURRENT SUPPLEMENTS.
9. CONSTRUCTION STAKING SHALL BE PROVIDED BY THE CONTRACTOR.
10. SEE LANDSCAPE PLANS FOR REVEGETATION AND LANDSCAPING REQUIREMENTS.
11. ALL ASPHALT AND CONCRETE PAVEMENT REMOVED FOR CONSTRUCTION SHALL BE SAWCUT.
12. ANY ADDITIONAL ASPHALT REQUIRED TO BE REMOVED FOR CONSTRUCTION OVER AREAS SHOWN ON PLANS IS CONSIDERED INCIDENTAL TO THE CONTRACT.
13. OWNER SHALL HAVE A BENCHMARK AND PROJECT CONTROL POINTS SET AT BEGINNING OF PROJECT TO USE FOR CONSTRUCTION STAKING BY CONTRACTOR.
14. ALL ROAD AND PAVEMENT LANE STRIPING SHALL BE PAINT WITH GLASS BEADS. ALL CROSSWALKS AND PAVEMENT MARKING SYMBOLS SHALL BE PREFORMED THERMOPLASTIC.
15. ORANGE SAFETY FENCE SHALL BE INSTALLED AT LOCATIONS WHERE THE LIMIT OF DISTURBANCE IS ADJACENT TO WETLANDS OR WETLANDS SETBACK. TEMPORARY CONSTRUCTION FENCE PLACED AROUND MATERIAL STORAGE OR CONSTRUCTION SITE SHALL BE 6' FENCING WITH SCREENED MESH.
16. CONTRACTOR SHALL PROVIDE ALL PERMITS REQUIRED FOR CONSTRUCTION EXCEPT FOR THE PERMITS PROVIDED BY OWNER IN CONTRACT DOCUMENTS.
17. NO WETLAND AREAS ARE ALLOWED TO BE DISTURBED. SEE THE WETLAND SETBACK MITIGATION REQUIREMENTS BY CLAFFEY ECOLOGICAL CONSULTANTS.
18. ALL BASE MAPPING INFORMATION WAS PROVIDED BY PEAK LAND CONSULTANTS, AS INCLUDED IN THE PROJECT BASE MAP DATED JANUARY 26, 2018.
19. IN THE PLAN AND PROFILE SHEETS, L IS LEFT AND R IS RIGHT OF CENTERLINE ALIGNMENT AS YOU LOOK UPSTATION.
20. DESIGN OR FINAL GRADES SHOWN IN PROFILES ARE NOTED AS CENTERLINE GRADING.
21. TETRA TECH IS NOT A GUARANTOR OF THE CONSTRUCTION CONTRACTORS OBLIGATION AND PERFORMANCE OF WORK.
22. TETRA TECH IS NOT RESPONSIBLE FOR SAFETY, IN, ON OR ABOUT THE PROJECT SITE, NOR FOR COMPLIANCE BY THE APPROPRIATE PARTY OF ANY REGULATIONS THERETO.
23. TETRA TECH EXERCISES NO CONTROL OF THE SAFETY OR ADEQUACY OF ANY EQUIPMENT, BUILDING COMPONENTS, SCAFFOLDING, FORM, OR OTHER WORK AIDS USED IN OR ABOUT THE PROJECTS, OR IN THE SUPERVISION OF THE SAME.
24. TECHNICAL SPECIFICATIONS FOR CIVIL INFRASTRUCTURE ARE PROVIDED UNDER SEPARATE COVER AND ARE INTEGRAL TO THE DRAWINGS AND THE WORK FOR THIS PROJECT.
25. THE OWNER SHALL HAVE A GEOTECHNICAL ENGINEER ON-SITE FOR MATERIALS TESTING FOR ALL EARTHWORK, PAVING AND UTILITY CONSTRUCTION. CONTRACTOR SHALL REGULARLY COORDINATE DIRECTLY WITH THE MATERIAL TESTING/ SPECIAL INSPECTIONS AGENT TO ENSURE THEY ARE ONSITE AT TIMES NEEDED TO TAKE SAMPLES, DOCUMENT OBSERVATIONS, ETC.

## UTILITY NOTES

1. THE TYPES, SIZE, LOCATION AND NUMBER OF ALL KNOWN UNDERGROUND UTILITIES ARE APPROXIMATE WHEN SHOWN ON THE DRAWINGS. IT SHALL BE THE RESPONSIBILITY OF THE CONTRACTOR TO VERIFY THE EXISTENCE AND LOCATION OF ALL UNDERGROUND UTILITIES ALONG THE ROUTE OF WORK PRIOR TO THE COMMENCEMENT OF ANY CONSTRUCTION. THE CONTRACTOR SHALL CONTACT ALL UTILITY COMPANIES TO COORDINATE SCHEDULES FOR UTILITY CONSTRUCTION.
2. CONTRACTOR SHALL BE RESPONSIBLE FOR RELOCATION OF ALL UTILITIES SHOWN OR NOT SHOWN ON THE PLANS THAT ARE IN CONFLICT WITH THE IMPROVEMENTS AND SHALL BE RESPONSIBLE FOR MAINTAINING THE INTEGRITY OF EXISTING UTILITIES.
3. ALL SANITARY SEWER CONSTRUCTION SHALL COMPLY WITH THE SNAKE RIVER WASTEWATER UTILITY STANDARDS AND SPECIFICATIONS.
4. DEVELOPER OR CONTRACTOR WILL NEED TO OBTAIN A SANITARY SEWER CONSTRUCTION PERMIT PRIOR TO CONSTRUCTION.
5. A PRE-CONSTRUCTION MEETING WITH THE SNAKE RIVER WATER DISTRICT AND THE SNAKE RIVER WASTEWATER UTILITY IS REQUIRED PRIOR TO CONSTRUCTION.
6. ALL SANITARY SEWER LINE CONNECTIONS TO EXISTING SEWER MAINS MUST BE COORDINATED WITH THE SNAKE RIVER WASTEWATER UTILITY TO ASSURE THAT UNINTERRUPTED SERVICE IS PROVIDED THROUGHOUT THE SYSTEM. CONTRACTOR SHALL MEET WITH THE SNAKE RIVER WASTEWATER UTILITY DISTRICT TO REVIEW TIE IN DETAILS AND SCHEDULES.
7. ALL WATER AND SANITARY SEWER MAINS SHALL BE TESTED BY THE CONTRACTOR PER SNAKE RIVER WATER DISTRICT AND SNAKE RIVER WASTEWATER UTILITY SPECIFICATIONS.
8. ALL WATER LINE CONSTRUCTION SHALL COMPLY WITH THE SNAKE RIVER WATER DISTRICT STANDARDS AND SPECIFICATIONS. GENERALLY, MINIMUM COVER ON WATER LINES IS 9' MINIMUM FOR THIS PROJECT.
9. ALL UTILITY STUBS SHALL BE MARKED WITH A 4" X 4" POST EXTENDING 4' ABOVE FINAL GRADE. THE POST SHALL BE PAINTED GREEN FOR SEWER, BLUE FOR WATER SERVICES AND WHITE FOR ANY OTHER UTILITIES. CONTRACTOR SHALL MAINTAIN AS-BUILTS TO ALL UTILITY STUB LOCATIONS WITH TIES TO EXISTING REFERENCE POINTS AND SURVEY LOCATION BASED ON ENGINEER'S COORDINATE SYSTEM. INSTALL PULL STRINGS IN ALL CONDUITS.
10. ALL TEMPORARY WATER SERVICE SHUT-OFFS AND SEWER MAIN DIVERSIONS FOR CONSTRUCTION SHALL BE COORDINATED WITH THE SNAKE RIVER WATER DISTRICT AND THE SNAKE RIVER WASTEWATER UTILITY PRIOR TO CONSTRUCTION.
11. CONTRACTOR SHALL PROVIDE AS-BUILT UTILITY DRAWINGS TO THE ENGINEER INCLUDING THREE TIES TO ALL INSTALLED APPURTENANCES.
12. PULL STRINGS SHALL BE PROVIDED BY THE CONTRACTOR IN ALL CONDUIT INSTALLED.

### MARKER DESCRIPTORS

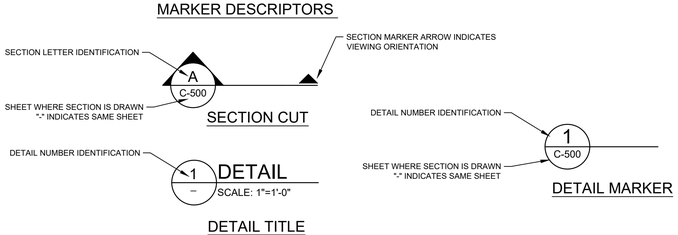


## GRADING AND EROSION CONTROL NOTES:

1. THE GROUND SURFACE AROUND THE EXTERIOR OF THE BUILDINGS SHALL BE SLOPED TO DRAIN AWAY FROM THE FOUNDATION IN ALL DIRECTIONS. SLOPED GRADES SHALL BE A MINIMUM 5% (6 INCHES IN THE FIRST 10 FEET). FOR UNPAVED AREAS AND A MINIMUM SLOPE OF 2% (2.5 INCHES IN THE FIRST 10 FEET) FOR PAVED AREA. THE GEOTECHNICAL ENGINEER SHALL REVIEW THESE REQUIREMENTS DURING CONSTRUCTION.
2. WATER SHALL BE USED AS A DUST PALLIATIVE WHERE REQUIRED. LOCATIONS SHALL BE AS ORDERED BY ENGINEER OR OWNER. CONTRACTOR SHALL PROVIDE WATER FOR DUST CONTROL. DUST CONTROL IS INCIDENTAL TO THE CONTRACT.
3. A WATER TRUCK SHALL BE AVAILABLE AT ALL TIMES DURING CONSTRUCTION FOR DUST ABATEMENT.
4. AT ALL TIMES DURING CONSTRUCTION, THE CONTRACTOR SHALL BE RESPONSIBLE FOR PREVENTING AND CONTROLLING ON-SITE EROSION DUE TO WIND AND RUNOFF, AS WELL AS VEHICLE TRACKING. THE CONTRACTOR SHALL ALSO BE RESPONSIBLE FOR INSTALLING AND MAINTAINING ALL EROSION CONTROL FACILITIES SHOWN HERE AND SHALL COMPLY WITH SUMMIT COUNTY EROSION CONTROL REQUIREMENTS.
5. ALL PERIMETER EROSION CONTROL MEASURES SHALL BE INSTALLED AND FUNCTIONAL, AND APPROVED BY ENGINEER PRIOR TO ANY OTHER EARTH-DISTURBING ACTIVITY. ALL OTHER STRUCTURAL EROSION CONTROL MEASURES SHALL BE IMPLEMENTED AS SOON AS THE FACILITIES, AROUND WHICH THEY ARE BASED, BECOME OPERATIONAL.
6. ANY EROSION CONTROL FACILITY DAMAGED OR DESTROYED PREMATURELY, BY ANY MEANS, SHALL BE IMMEDIATELY REPAIRED BY THE CONTRACTOR.
7. NATURAL VEGETATION SHALL BE RETAINED AND PROTECTED WHEREVER POSSIBLE. IT SHALL BE THE RESPONSIBILITY OF THE CONTRACTOR TO AVOID DAMAGE TO EXISTING FOLIAGE THAT LIES IN THE PROJECT AREA, UNLESS DESIGNATED FOR REMOVAL, AND CONTRACTOR SHALL BE LIABLE FOR SUCH DAMAGE AT HIS EXPENSE.
8. THERE SHALL BE NO EARTH DISTURBANCE OUTSIDE THE LIMIT OF DISTURBANCE DESIGNATED ON THESE PLANS.
9. THE CONTRACTOR SHALL PREVENT SEDIMENT, DEBRIS AND ALL OTHER POLLUTANTS FROM ENTERING NATURAL DRAINAGE DURING ALL DEMOLITION, EXCAVATION, TRENCHING, BORING, GRADING OR OTHER CONSTRUCTION OPERATIONS THAT ARE PART OF THIS PROJECT. THE CONTRACTOR SHALL BE HELD RESPONSIBLE FOR REMEDIATION OF ANY ADVERSE IMPACTS TO ADJACENT WATERWAYS, WETLANDS, ETC., RESULTING FROM WORK DONE AS PART OF THIS PROJECT.
10. THE GENERAL CONTRACTOR, GRADING CONTRACTOR AND/OR THEIR AUTHORIZED AGENTS SHALL INSURE NO SPILLAGE OF ALL LOADS OF CUT AND FILL MATERIAL DURING TRANSPORT ON PUBLIC RIGHTS OF WAYS.
11. THE CONTRACTOR SHALL BE REQUIRED TO COMPLY WITH SUMMIT COUNTY DRAINAGE AND EROSION CONTROL ORDINANCES AS FOUND IN SUMMIT COUNTY CODE CHAPTER 7 AND THE SUMMIT COUNTY GRADING AND EXCAVATION MANUAL.
12. THE CONTRACTOR SHALL BE REQUIRED TO COMPLY WITH THE EROSION CONTROL AND WATER QUALITY BEST MANAGEMENT PRACTICES PER THE STORM WATER MANAGEMENT PLAN BY THE CONTRACTOR.
13. ALL INITIAL EROSION CONTROL DEVICES SHALL BE INSTALLED BY THE CONTRACTOR AND APPROVED BY ENGINEER PRIOR TO CONSTRUCTION.
14. ROADS SHALL BE KEPT CLEAN OF CONSTRUCTION DEBRIS INCLUDING MUD AND DIRT. CONTRACTOR IS RESPONSIBLE FOR ALL SWEEPING, CLEANING AND WASHING OF ROADS AS REQUIRED BY THE ENGINEER, COUNTY OR OWNER.
15. CONDITIONS IN THE FIELD MAY WARRANT EROSION CONTROL MEASURES IN ADDITION TO WHAT IS SHOWN ON THESE PLANS. THE CONTRACTOR SHALL IMPLEMENT ALL MEASURES THAT ARE DETERMINED NECESSARY, AND MEET THE REQUIREMENTS OF THE STATE STORMWATER DISCHARGE PERMIT.
16. NEGATIVE IMPACTS TO DOWNSTREAM AREAS CAUSED BY CONSTRUCTION TO BE MONITORED AND CORRECTED BY THE CONTRACTOR. ANY OFF-SITE CLEANUP, DIRECTED BY THE ENGINEER, (INCLUDING STREET CLEANING), SHALL BE COMPLETED WITHIN 24 HOURS OF WRITTEN INSTRUCTION, OR RISK CONSTRUCTION STOPPAGE.
17. APPROVED EROSION AND SEDIMENT CONTROL "BEST MANAGEMENT PRACTICES" ("BMP") SHALL BE MAINTAINED AND KEPT IN GOOD REPAIR FOR THE DURATION OF THIS PROJECT. AT A MINIMUM, THE CONTRACTOR OR HIS AGENT SHALL INSPECT ALL BMPS WEEKLY AND AFTER SIGNIFICANT PRECIPITATION EVENTS. ALL NECESSARY MAINTENANCE AND REPAIR SHALL BE COMPLETED IN A TIMELY MANNER. ACCUMULATED SEDIMENT AND DEBRIS SHALL BE REMOVED FROM A BMP WHEN THE SEDIMENT LEVEL REACHES ONE HALF THE HEIGHT OF THE BMP OR, AT ANY TIME THAT SEDIMENT OR DEBRIS ADVERSELY IMPACTS THE FUNCTIONING OF THE BMP.
18. WATER USED IN THE CLEANING OF CONCRETE TRUCK DELIVERY CHUTES SHALL BE DISCHARGED INTO A PRE-DEFINED, BERMED CONTAINMENT AREA ON THE JOB SITE. THE REQUIRED CONTAINMENT AREA IS TO BE BERMED SO THAT WASH WATER IS TOTALLY CONTAINED. WASH WATER DISCHARGED INTO THE CONTAINMENT AREA SHALL BE ALLOWED TO INFILTRATE OR EVAPORATE. DRIED CEMENT WASTE SHALL BE REMOVED FROM THE CONTAINMENT AREA AND PROPERLY DISPOSED OF. SHOULD A PRE-DEFINED BERMED CONTAINMENT AREA NOT BE AVAILABLE DUE TO THE PROJECT SIZE, OR LACK OF AN AREA WITH A SUITABLE GROUND SURFACE FOR ESTABLISHING A CONTAINMENT AREA, PROPER DISPOSAL OF READY MIX WASHOUT AND RINSE OFF WATER AT THE JOB SITE SHALL CONFORM TO THE APPROVED TECHNIQUES AND PRACTICES IDENTIFIED IN THE COLORADO DEPARTMENT OF PUBLIC HEALTH & ENVIRONMENT'S TRAINING VIDEO ENTITLED "BUILDING FOR A CLEANER ENVIRONMENT, READY MIX WASHOUT TRAINING", AND ITS ACCOMPANYING MANUAL ENTITLED, "READY MIX WASHOUT GUIDEBOOK, VEHICLE AND EQUIPMENT WASHOUT AT CONSTRUCTION SITES." THE DIRECT OR INDIRECT DISCHARGE OF WATER CONTAINING WASTE CEMENT TO THE STORM SEWER SYSTEM IS PROHIBITED. INFORMATION ABOUT, OR COPIES OF THE VIDEO AND TRAINING MANUAL ARE AVAILABLE FROM THE WATER QUALITY CONTROL DIVISION, COLORADO DEPARTMENT OF PUBLIC HEALTH & ENVIRONMENT, 4300 CHERRY CREEK DRIVE SOUTH, DENVER, COLORADO 80222-1530, 303-692-3555.
19. SOILS THAT WILL BE STOCKPILED FOR MORE THAN 30 DAYS SHALL BE PROTECTED FROM WIND AND WATER EROSION WITHIN 14 DAYS OF STOCKPILE CONSTRUCTION. STABILIZATION AND PROTECTION OF THE STOCKPILE MAY BE ACCOMPLISHED BY ANY OF THE FOLLOWING: MULCHING, TEMPORARY/PERMANENT REVEGETATION OPERATION, CHEMICAL SOIL STABILIZER APPLICATION (REQUIRES PRIOR APPROVAL), OR EROSION CONTROL MATTING/GEOTEXTILES. IF STOCKPILES ARE LOCATED WITHIN 100 FEET OF DRAINAGEWAY, ADDITIONAL SEDIMENT CONTROLS SUCH AS TEMPORARY DIKES OR SILT FENCE SHALL BE REQUIRED.
20. TEMPORARY EROSION CONTROL MEASURES SHALL NOT BE REMOVED UNTIL SUCH TIME AS ALL TRIBUTARY DISTURBED AREAS ARE SUFFICIENTLY STABILIZED IN THE OPINION OF THE PROJECT ENGINEER TO MINIMIZE EROSION POTENTIAL.
21. WHEN TEMPORARY EROSION CONTROL MEASURES ARE REMOVED, THE CONTRACTOR SHALL BE RESPONSIBLE FOR THE CLEAN-UP AND REMOVAL OF ALL SEDIMENT AND DEBRIS FROM ALL DRAINAGE AND OTHER PUBLIC FACILITIES, AND TO RESTORE THE AREA TO NATURAL CONDITION.
22. ALL CURB AND GUTTERS SHALL BE CATCH SECTION UNLESS NOTED AS SPILL ON THE PLANS.
23. ALL SLOPES STEEPER THAN 12:1 THAT ARE TO BE REVEGETATED SHALL BE STABILIZED WITH BIODEGRADABLE TEMPORARY EROSION CONTROL BLANKET.

## TRAFFIC CONTROL NOTES:

1. A GENERAL TRAFFIC CONTROL PLAN AND STAGING PLAN SHALL BE SUBMITTED BY THE CONTRACTOR TO THE OWNER FOR APPROVAL PRIOR TO CONSTRUCTION.
2. ALL TRAFFIC CONTROL DETAILS SHALL BE IN ACCORDANCE WITH THE MANUAL ON UNIFORM TRAFFIC CONTROL DEVICES LATEST EDITION WITH CURRENT SUPPLEMENTS, EXCEPT AS MODIFIED HEREIN.
3. PUBLIC TRAFFIC SHALL BE PROVIDED PASSAGE TO ALL ACCESSES, FLAGGERS SHALL BE USED AS NECESSARY. WHEN FLAGGERS ARE USED, W20-2A SIGNS SHALL BE USED IN ADVANCE OF STATION.
4. CONTRACTOR SHALL MAINTAIN AT LEAST 2-LANE ACCESS ON ALL PUBLIC ROADS AT ALL TIMES UNLESS OTHERWISE APPROVED BY THE COUNTY.
5. ALL TRAFFIC CONTROL WORK SHALL BE SUPERVISED BY A CERTIFIED TRAFFIC CONTROL OFFICER.
6. THE CONTRACTOR SHALL MAINTAIN ACCESS, OR PROVIDE TEMPORARY DETOURS TO ALL ADJACENT PROPERTIES INCLUDING THE SPRINGS AT RIVER RUN, RED HAWK LODGE, KEYSTONE SKI RESORT AND THE BIKE PATH. THE CONTRACTOR SHALL SUBMIT DETOUR PLANS FOR APPROVAL TO THE OWNER PRIOR TO THE IMPLEMENTATION OF ANY DETOURS OR IMPACTS TO ADJACENT PROPERTIES.

## GENERAL LEGEND

- SS — EXISTING SANITARY SEWER
- W — EXISTING WATER
- W X W X — EXISTING ABANDONED WATER
- UE UE — EXISTING UNDERGROUND ELECTRIC
- FO FO — EXISTING UNDERGROUND FIBER OPTIC
- G G — EXISTING GAS LINE
- P — EXISTING TELEPHONE PEDESTAL
- E — EXISTING ELECTRIC TRANSFORMER
- S — EXISTING SEWER MANHOLE
- EXISTING FIRE HYDRANT
- EXISTING WATER VALVE
- EXISTING ASPHALT PAVEMENT
- 9502 — EXISTING MINOR CONTOUR
- 9500 — EXISTING MAJOR CONTOUR
- EDGE OF CREEK
- EXISTING CURB AND GUTTER
- EXISTING LIGHT
- EXISTING TREES
- STM — EXISTING DRAINAGE CULVERT/STRUCTURE
- PROPERTY LINE
- LIMIT OF DISTURBANCE
- EXISTING WETLAND
- PROPOSED CONCRETE PAVEMENT
- PROPOSED CONCRETE PAVEMENT W/ SNOW MELT
- PROPOSED ASPHALT PAVEMENT
- PROPOSED GRASSCRETE PAVEMENT
- PROPOSED CONCRETE PAVERS W/ SNOW MELT
- PROPOSED CONCRETE PAVERS
- SNOW STORAGE AREA
- PROPOSED CONCRETE PAN
- PROPOSED LIGHT LOCATION
- PROPOSED 1' CONTOUR
- PROPOSED 5' CONTOUR
- SS — PROPOSED SANITARY SEWER MAIN
- W — PROPOSED WATER LINE
- PROPOSED DRAINAGE PIPE/CULVERT
- PROPOSED DRAINAGE STRUCTURE
- PROPOSED RIP RAP
- +100.00 — PROPOSED SPOT ELEVATION
- x.xx% — PROPOSED SPOT GRADE (SLOPE)
- UE — PROPOSED UNDERGROUND ELECTRIC
- C — PROPOSED COMMUNICATIONS
- G — PROPOSED GAS LINE
- ELB — PROPOSED EROSION LOG BARRIER

TETRA TECH ASSUMES NO RESPONSIBILITY FOR EXISTING UTILITY LOCATIONS (HORIZONTAL AND VERTICAL). THE EXISTING UTILITIES SHOWN ON THIS DRAWING HAVE BEEN PLOTTED FROM THE BEST AVAILABLE INFORMATION. IT IS, HOWEVER, THE RESPONSIBILITY OF THE CONTRACTOR TO FIELD VERIFY THE LOCATION OF ALL UTILITIES PRIOR TO THE COMMENCEMENT OF ANY CONSTRUCTION ACTIVITIES.

COLORADO 811
KNOW WHAT'S BELOW. CALL BEFORE YOU DIG.

Utility Notification
Center of Colorado
Administrative Office 303-232-1991
16361 Table Mountain Parkway
Golden, Co 80215

CALL 2-BUSINESS DAYS IN ADVANCE BEFORE YOU DIG, GRADE, OR EXCAVATE FOR THE MARKING OF UNDERGROUND MEMBER UTILITIES.

UNCC
CALL BEFORE
YOU DIG
1-800-922-1987

## ABBREVIATIONS

| | |
|---|---|
| AC | ACRE |
| ABC | AGGREGATE BASE COURSE |
| BOS | BOTTOM OF STAIRS |
| BOW | BOTTOM OF WALL |
| BW | FINISH GRADE AT BOTTOM OF WALL |
| BVCS | BEGIN VERTICAL CURVE STATION |
| C | CHORD |
| CDOT | COLORADO DEPARTMENT OF TRANSPORTATION |
| CFS | CUBIC FEET PER SECOND |
| CL | CENTERLINE, CLASS |
| CMP | CORRUGATED METAL PIPE |
| CONC | CONCRETE |
| CY | CUBIC YARD |
| DEMO | DEMOLISH |
| E | EASTING |
| EXIST | EXISTING GROUND |
| EL | ELEVATION |
| ELEC | ELECTRICAL |
| ELEV | ELEVATOR |
| EOA | EDGE OF ASPHALT |
| EOC | EDGE OF CONCRETE |
| EOCP | EDGE OF CONCRETE PANS |
| EOG | EDGE OF GRAVEL |
| EOR | EDGE OF ROAD |
| EVCS | END VERTICAL CURVE STATION |
| EX TC | EXISTING TOP/BACK OF CURB |
| FES | FLARED END SECTION |
| FF | FINISH FLOOR |
| FG | FINISH GRADE |
| FT, ' | FOOT, FEET |
| FH | FIRE HYDRANT |
| FL | DRAINAGE FLOWLINE |
| HC | HANDICAP RAMPS |
| HDPE | HIGH DENSITY POLYETHYLENE |
| HGL | HYDRAULIC GRADE LINE |
| HORIZ | HORIZONTAL |
| HMA | HOT MIX ASPHALT |
| IN, " | INCH |
| INV | INVERT |
| L | LENGTH, LEFT, LINE |
| LF | LINEAR FEET |
| N | NORTH, NORTHING |
| NO. | NUMBER |
| NTS | NOT TO SCALE |
| OFF | OFFSET |
| PC | POINT OF CURVATURE |
| PH | PHASE |
| PI | POINT OF INTERSECTION |
| PROP | PROPOSED |
| PT | POINT OF TANGENCY |
| PVI | POINT OF VERTICAL INTERSECTION |
| R | RADIUS, RIGHT |
| R/W | RIGHT-OF-WAY |
| RCBC | REINFORCED CONCRETE PIPE, BOX CULVERT |
| RCP | REINFORCED CONCRETE PIPE |
| RCPA | REINFORCED CONCRETE PIPE, ARCH |
| SD | STORM DRAIN |
| SS | SEWER SERVICE |
| STA | STATION |
| SHT | SHEET |
| SWMP | STORMWATER MANAGEMENT PLAN |
| TBOC | TOP BACK OF CURB |
| TOC | TOP OF CONCRETE |
| TYP | TYPICAL |
| VERT | VERTICAL |


OZ ARCHITECTURE
3003 Larimer Street
Denver, Colorado 80205
phone 303.861.5704
www.ozarch.com

TETRA TECH
www.tetratech.com
130 SKI HILL ROAD SUITE 140
BRECKENRIDGE, COLORADO 80424
PHONE: (970)453-6394


ONE RIVER RUN
75 HUNKI DORI CT.
KEYSTONE, CO 80435

PROJ. NO. 23526-20001
DRAWN: KGS
CHECKED: CDD
APPROVED: CDD
DATE: 2020/06/25

© OZ ARCHITECTURE

ONE RIVER RUN

ISSUED FOR:
ISSUE FOR PERMIT/ ISSUE FOR CONSTRUCTION

SHEET TITLE:
LEGEND & ABBREVIATIONS

SCALE: NTS
SHEET NUMBER
C-100

6/19/2020 1:49:55 PM - O:\PROJECTS\BRECKENRIDGE\23526\200-23526-20001\CAD\SHEETFILES\C100 LEGEND & ABBREVIATION.DWG - PEOPLES, CHARLEY

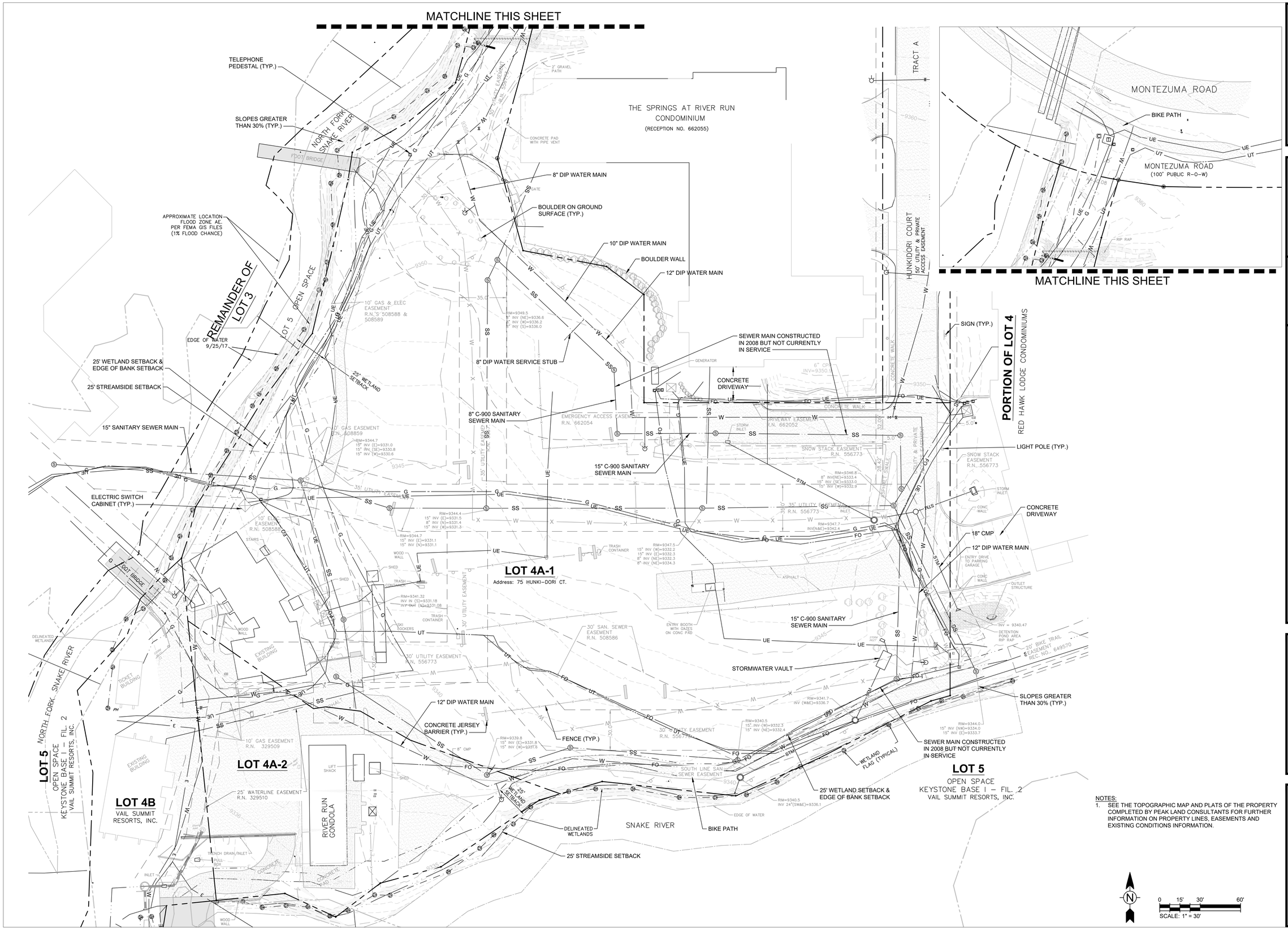


NOTES:
1. SEE THE TOPOGRAPHIC MAP AND PLATS OF THE PROPERTY COMPLETED BY PEAK LAND CONSULTANTS FOR FURTHER INFORMATION ON PROPERTY LINES, EASEMENTS AND EXISTING CONDITIONS INFORMATION.


OZ ARCHITECTURE
3003 Larimer Street
Denver, Colorado 80205
phone 303.861.5704
www.ozarch.com

TETRA TECH
www.tetratech.com
130 SKI HILL ROAD SUITE 140
BRECKENRIDGE, COLORADO 80424
PHONE: (970)453-6394


# ONE RIVER RUN
## 75 HUNKI DORI CT.
## KEYSTONE, CO 80435

PROJ. NO. 23526-20001
DRAWN: KGS
CHECKED: CDD
APPROVED: CDD
DATE: 2020/06/25

© OZ ARCHITECTURE

ONE RIVER RUN

ISSUED FOR:
ISSUE FOR PERMIT/ ISSUE FOR CONSTRUCTION

SHEET TITLE:
EXISTING CONDITIONS PLAN

SCALE: 1" = 30'
SHEET NUMBER
C-101

6/19/2020 1:50:19 PM - O:\PROJECTS\BRECKENRIDGE\23526\200-23526-20001\CAD\SHEETFILES\C101 EXISTING CONDITIONS.DWG - PEOPLES, CHARLEY

MATCHLINE THIS SHEET

THE SPRINGS AT RIVER RUN CONDOMINIUM
(RECEPTION NO. 662055)

NORTH FORK SNAKE RIVER

FOOT BRIDGE

REMAINDER OF LOT 3

LOT 5 OPEN SPACE

TRACT A

HUNKIDORI COURT
50' UTILITY & PRIVATE ACCESS EASEMENT

PORTION OF LOT 4
RED HAWK LODGE CONDOMINIUMS

LOT 4A-1
Address: 75 HUNKI-DORI CT.

LOT 4A-2

LOT 4B
VAIL SUMMIT RESORTS, INC.

LOT 5
OPEN SPACE
KEYSTONE BASE I – FIL. 2
VAIL SUMMIT RESORTS, INC.

SNAKE RIVER

REMOVE AND RELOCATE A PORTION OF THE EXISTING WATER MAIN

REMOVE EXISTING LIGHT POLES WITHIN THE LIMIT OF DISTURBANCE (TYP.)

REMOVE EXISTING FIRE HYDRANT

REMOVE SIGNS WITHIN LIMIT OF DISTURBANCE (TYP.)

REPAVE EXISTING PATH

REMOVE EXISTING WATER STUB BY REMOVING EX. 12"x8" TEE AND 8" G.V. W/ TB. REPLACE WITH 12" DIP W/ SOLID SLEEVES. (12"x10" REDUCER MAY BE NECESSARY ON NORTH END)

REMOVE CURB & GUTTER

EXISTING STORM SEWER TO BE REMOVED AFTER NEW STORM SEWER IS CONSTRUCTED

REMOVE ASPHALT TO EDGE OF CONCRETE

REMOVE EXISTING WATER STUB BY REMOVING EX. 12"x6" TEE AND 6" G.V. W/ TB. REPLACE WITH 12" DIP W/ SOLID SLEEVES

EXISTING SEWER MAIN TO BE REMOVED OR ABANDONED IN PLACE AFTER NEW MAIN IS CONSTRUCTED. ABANDON IN PLACE WITH FLOWFILL

EXISTING ELECTRIC AND GAS LINES TO BE RELOCATED BY XCEL ENERGY

REMOVE STORM INLET

REMOVE SANITARY SEWER SERVICE AFTER NEW SERVICE IS ONLINE

RELOCATE EXISTING FIRE HYDRANT

EXISTING ELECTRIC SWITCH CABINET TO BE RELOCATED BY XCEL ENERGY

DEMOLISH EXISTING BUILDINGS

EXISTING SEWER MAIN TO BE REMOVED OR ABANDONED IN PLACE AFTER NEW MAIN IS CONSTRUCTED. ABANDON IN PLACE WITH FLOWFILL

REMOVE FENCE AND BARRIERS WITHIN EXISTING PARKING LOT

EXISTING FIRE HYDRANT TO REMAIN

RELOCATE EXISTING UTILITIES

DEMOLISH EXISTING BUILDING

REMOVE EXISTING BOULDERS (TYP.)

EXISTING STORM VAULT TO REMAIN

SAWCUT ASPHALT PAVEMENT

REMOVE ASPHALT PAVEMENT

REPAVE ASPHALT PAVEMENT

SAWCUT ASPHALT PAVEMENT

REMOVE 8" CMP

EXISTING RIPRAP TO REMAIN

EXISTING FIRE HYDRANT TO REMAIN

SAWCUT ASPHALT PAVEMENT

RELOCATE EXISTING LIGHT POLE TO EAST SIDE OF NEW SIDEWALK

REMOVE EXISTING ASPHALT PAVEMENT

REMOVE PORTION OF CONCRETE WALL

REMOVE EXISTING CONCRETE DRIVEWAY - CONFIRM IF EXISTING CONCRETE IS SNOW MELTED. IF SNOW MELTED, CONTRACTOR TO REPAIR SNOW MELT SYSTEM FOR PORTION OF SNOW MELT AREA REMOVED

SAWCUT CONCRETE PAVEMENT

EXISTING STORM SEWER TO BE REMOVED

REMOVE PORTION OF CONCRETE WALL

REMOVE CONCRETE WALL

SAWCUT ASPHALT PAVEMENT

LIMIT OF DISTURBANCE LINE

REMOVE EXISTING FIRE HYDRANT

REMOVE EXISTING MANHOLE

REMOVE PORTION OF EXISTING STORM LINE (SEE STORM LINE 1 PLAN AND PROFILE SHEET C-216)

REMOVE EXISTING MANHOLE

REMOVE EXISTING STORM PIPE

MONTEZUMA ROAD

SAWCUT ASPHALT PAVEMENT

MONTEZUMA ROAD
(100' PUBLIC R-O-W)

LIMITS OF DISTURBANCE LINE

REMOVE RIPRAP W/ IN LIMIT OF DISTURBANCE

MATCHLINE THIS SHEET

REMOVE ASPHALT PAVEMENT

REMOVE AND REPLACE ASPHALT

REMOVE WATER MAIN

REMOVE FENCE/BARRIER

REMOVE CURB & GUTTER

NOTES:
1. SEE SURVEY PLAT FOR EXTENTS OF EXISTING EASEMENTS TO BE VACATED FOR THE PROJECT.
2. CONTRACTOR SHALL COORDINATE WITH OWNER AND KEYSTONE SKI RESORT FOR RELOCATION AND DEMOLITION OF PRIVATE UTILITIES AND SERVICES IMPACTED BY THIS PROJECT.
3. TREES WITHIN THE PROJECT AREA HAVE NOT BEEN SURVEYED. ALL EXISTING TREES WITHIN THE LIMIT OF DISTURBANCE SHALL BE REMOVED.

0 15' 30' 60'
SCALE: 1" = 30'


OZ ARCHITECTURE
3003 Larimer Street
Denver, Colorado 80205
phone 303.861.5704
www.ozarch.com

TETRA TECH
www.tetratech.com
130 SKI HILL ROAD SUITE 140
BRECKENRIDGE, COLORADO 80424
PHONE: (970)453-6394


# ONE RIVER RUN
75 HUNKI DORI CT.
KEYSTONE, CO 80435

PROJ. NO. 23526-20001
DRAWN: KGS
CHECKED: CDD
APPROVED: CDD
DATE: 2020/06/25

© OZ ARCHITECTURE

ONE RIVER RUN

ISSUED FOR:
ISSUE FOR PERMIT/ ISSUE FOR CONSTRUCTION

SHEET TITLE:
DEMOLITION PLAN

SCALE: 1" = 30'
SHEET NUMBER
C-102

6/19/2020 1:50:38 PM - O:\PROJECTS\BRECKENRIDGE\23526\200-23526-20001\CAD\SHEETFILES\C102 DEMOLITION PLAN.DWG - PEOPLES, CHARLEY

MATCHLINE THIS SHEET

4' ORANGE CONSTRUCTION FENCE (TYP.)

13 C-502 SILT FENCE

NORTH FORK SNAKE RIVER

THE SPRINGS AT RIVER RUN CONDOMINIUM
(RECEPTION NO. 662055)

TRACT A

CONSTRUCTION TRAILER

APPROXIMATE LOCATION FLOOD ZONE AE PER FEMA GIS FILES (1% FLOOD CHANCE)

REMAINDER OF LOT 3

LOT 5 OPEN SPACE

13 C-502 SILT FENCE

4' ORANGE CONSTRUCTION FENCE (TYP.)

TEMPORARY SEDIMENTATION POND
SURFACE AREA = 1500 SF
DEPTH = 3'

25' WETLAND SETBACK & EDGE OF BACK SETBACK

TEMPORARY CONSTRUCTION FENCE

MAINTAIN 26' EMERGENCY ACCESS FROM CONSTRUCTION FENCE AT ALL TIMES

HUNKIDORI COURT
50' UTILITY & PRIVATE ACCESS EASEMENT

PORTION OF LOT 4
RED HAWK LODGE CONDOMINIUMS

TEMPORARY VEHICLE TRACKING PAD AT CONSTRUCTION SITE EXIT 2 C-502

ACCESS GATE

EXISTING FIRE HYDRANT TO REMAIN ACCESSIBLE DURING CONSTRUCTION

18' FOR FIRE ACCESS

LOT 4A-1

Address: 75 HUNKI-DORI CT.

CULVERT OUTLET PROTECTION 12 C-502

18 C-502 INLET PROTECTION

CONSTRUCTION TRAILER

PORTABLE SANITARY FACILITIES

MAINTAIN 26' FROM LIFT MAZE FOR FIRE ACCESS

LOT 5
OPEN SPACE
KEYSTONE BASE I – FIL. 2
VAIL SUMMIT RESORTS, INC.

LOT 4A-2

LOT 4B
VAIL SUMMIT RESORTS, INC.

RIVER RUN GONDOLA

SILT FENCE 13 C-502

25' WETLAND SETBACK & EDGE OF BANK SETBACK

LOT 5
OPEN SPACE
KEYSTONE BASE I – FIL. 2
VAIL SUMMIT RESORTS, INC.

26' FOR FIRE ACCESS

SNAKE RIVER

CULVERT OUTLET PROTECTION 12 C-502

LIMIT OF DISTURBANCE

4' ORANGE CONSTRUCTION FENCE (TYP.)

26' FOR FIRE ACCESS

SILT FENCE 13 C-502

4' ORANGE CONSTRUCTION FENCE (TYP.)

MONTEZUMA ROAD

MONTEZUMA ROAD
(100' PUBLIC R-O-W)

13 C-502 SILT FENCE

CULVERT INLET PROTECTION 11 C-502

MATCHLINE THIS SHEET

NOTES
1. REVEGETATION IS REQUIRED FOR ALL AREAS OUTSIDE OF THE BUILDINGS AND PAVEMENT AREA. REFER TO LANDSCAPE PLANS FOR REVEGETATION AND PLANTING REQUIREMENTS.
2. THIS PLAN INCLUDES INITIAL PERIMETER EROSION CONTROL AND SOME OF THE OTHER EROSION CONTROL MEASURES THAT WILL BE REQUIRED TO BE IMPLEMENTED DURING CONSTRUCTION ACCORDING TO THE CONTRACTOR'S STORMWATER MANAGEMENT PLAN.

N

0 15' 30' 60'
SCALE: 1" = 30'


OZ ARCHITECTURE
3003 Larimer Street
Denver, Colorado 80205
phone 303.861.5704
www.ozarch.com

TETRA TECH
www.tetratech.com
130 SKI HILL ROAD SUITE 140
BRECKENRIDGE, COLORADO 80424
PHONE: (970)453-6394


# ONE RIVER RUN
## 75 HUNKI DORI CT.
## KEYSTONE, CO 80435

PROJ. NO. 23526-20001
DRAWN: KGS
CHECKED: CDD
APPROVED: CDD
DATE: 2020/06/25

© OZ ARCHITECTURE

ONE RIVER RUN

ISSUED FOR:
ISSUE FOR PERMIT/ ISSUE FOR CONSTRUCTION

SHEET TITLE:
EROSION CONTROL & CONSTRUCTION STAGING PLAN

SCALE: 1" = 30'
SHEET NUMBER
C-103

6/19/2020 1:51:16 PM - O:\PROJECTS\BRECKENRIDGE\23526\200-23526-20001\CAD\SHEETFILES\C103 EROSION CONTROL PLAN.DWG - PEOPLES, CHARLEY

MATCHLINE THIS SHEET

CONCRETE PADS FOR ELECTRIC TRANSFORMERS BY XCEL ENERGY

AERIAL FIRE TRUCK TURN AROUND

MATCH EXISTING ASPHALT PAVEMENT

25' BUILDING SETBACK

FIRE LANE SIGN (TYP.) (SEE SHEET C111)

APPROXIMATE LOCATION FLOOD ZONE AE. PER FEMA GIS FILES (1% FLOOD CHANCE)

NORTH FORK SNAKE RIVER

REMAINDER OF LOT 3

LOT 5 OPEN SPACE

25' WETLAND SETBACK & EDGE OF BANK SETBACK

25' STREAMSIDE SETBACK

WETLAND BOUNDARY

RIVER RUN VILLAGE

6.0' WIDE ASPHALT PATH (10 / C-501)

BOULDER WALL (8 / C-501)

THE SPRINGS AT RIVER RUN CONDOMINIUM (RECEPTION NO. 662055)

CONCRETE PAD FOR EMERGENCY GENERATOR (SEE ELECTRICAL PLANS)

26.00' WIDTH FIRE ACCESS

25' BUILDING SETBACK (TYP.)

BUILDING OVERHANG (14' MIN. CLEARANCE - SEE ARCHITECTURAL PLANS)

BUILDING COLUMN (TYP.)

TIE ASPHALT PATH TO EXISTING PATH. RESURFACE EXISTING ASPHALT SECTION

CONCRETE PAVERS W/ SNOW MELT (TYP.) (SEE LANDSCAPE PLANS)

FIRST FLOOR ELEVATION = 9351.50

ONE RIVER RUN BUILDING FOOTPRINT

NORTH DRIVEWAY (SEE PLAN & PROFILE SHEET C-202)

NORTH DRIVEWAY

FIRE LANE SIGN (TYP.) (SEE SHEET C111)

RETAINING WALL (SEE STRUCTURAL PLANS)

COOLING TOWERS LOCATION. REFER TO STRUCTURAL FOR CONCRETE SLAB DESIGN

16 / C-501 CONCRETE PAVEMENT

LOADING DOCK AREA

PARKING GARAGE ENTRANCE

16 / C-501 CONCRETE PAVEMENT

TRACT A

HUNKIDORI COURT 50' UTILITY & PRIVATE ACCESS EASEMENT

DELIVERY TRUCK TURN LOADING DOCK

HUNKI DORI COURT (SEE PLAN & PROFILE SHEET C-201)

FENCE (SEE LANDSCAPE PLANS)

RETAINING WALL (SEE STRUCTURAL PLANS)

LOT 4A-1

Address: 75 HUNKI-DORI CT.

STEPS (SEE ARCHITECTURAL PLANS FOR DETAIL)

LANDSCAPE ISLAND (TYP.)

PLAZA LEVEL ELEVATION = 9339.00'

PLAZA LEVEL ELEVATION = 9339.00'

ONE RIVER RUN BUILDING FOOTPRINT

CONCRETE PAVEMENT (16 / C-501)

BUILDING ELEV= 9341.0

2 / C-501 ASPHALT PAVEMENT - PATH SECTION

BOLLARD LIGHTS (TYP.) (SEE LANDSCAPE PLANS)

2 / C-501 ASPHALT PAVEMENT - PATH SECTION

MATCH EXISTING ASPHALT PAVEMENT

ASPHALT PAVEMENT - ROAD SECTION (2 / C-501)

MATCH EXISTING PAVEMENT

LOT 4A-2

ASPHALT PAVEMENT - ROAD SECTION (2 / C-501)

ASPHALT PAVEMENT - ROAD SECTION (2 / C-501)

26.00' WIDTH FIRE ACCESS

LOT 4B VAIL SUMMIT RESORTS, INC.

LOT 5 OPEN SPACE KEYSTONE BASE I – FIL. 2 VAIL SUMMIT RESORTS, INC.

WETLAND FLAG (TYPICAL)

26.00' WIDTH FIRE ACCESS

GRASSCRETE (TYP.) (18 / C-501)

SNAKE RIVER

25' BUILDING SETBACK

25' WETLAND SETBACK & EDGE OF BANK SETBACK

25' STREAMSIDE SETBACK

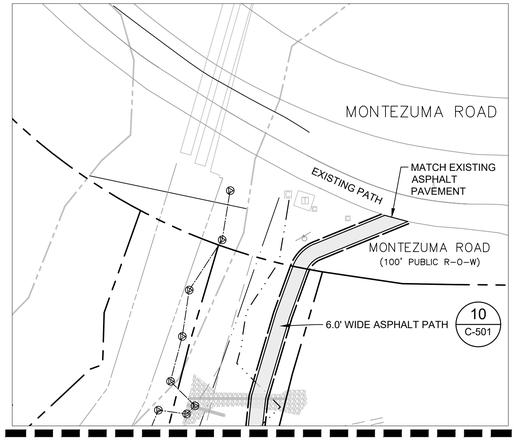


MATCHLINE THIS SHEET

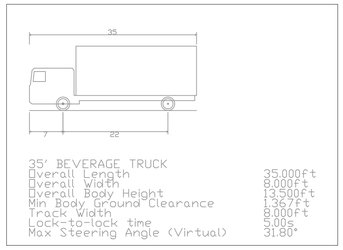


DELIVERY TRUCK TURNING TEMPLATE

NOTES:

1. TEMPORARY CONSTRUCTION EASEMENTS TO BE PROVIDED BY ONE RIVER RUN OWNERSHIP GROUP FOR ADJACENT PROPERTY OWNERS FOR DRIVEWAY, WALL, AND GRADING CONSTRUCTION.
2. SEE ARCHITECTURAL AND STRUCTURAL PLANS FOR DETAILS OF RAILINGS AND GUARDRAILS AT ALL WALL LOCATIONS.
3. DIFFERENTIAL HEAVING AND SETTLEMENT OF PAVEMENT MAY OCCUR BETWEEN SNOW MELT AND NON-SNOW MELT PAVEMENT AREAS. SEE SHEET C-113 FOR FURTHER INFORMATION ON LOCATIONS AND REQUIREMENTS.

N

0 15' 30' 60'

SCALE: 1" = 30'


OZ ARCHITECTURE

3003 Larimer Street
Denver, Colorado 80205
phone 303.861.5704
www.ozarch.com

TETRA TECH
www.tetratech.com
130 SKI HILL ROAD SUITE 140
BRECKENRIDGE, COLORADO 80424
PHONE: (970)453-6394


# ONE RIVER RUN

75 HUNKI DORI CT.
KEYSTONE, CO 80435

PROJ. NO. 23526-20001
DRAWN: KGS
CHECKED: CDD
APPROVED: CDD
DATE: 2020/06/25

© OZ ARCHITECTURE

ONE RIVER RUN

ISSUED FOR:
ISSUE FOR PERMIT/ ISSUE FOR CONSTRUCTION

SHEET TITLE:
CIVIL SITE PLAN

SCALE: 1" = 30'
SHEET NUMBER

C-104

6/19/2020 1:52:12 PM - O:\PROJECTS\BRECKENRIDGE\23526\200-23526-20001\CAD\SHEETFILES\C104 SITE PLAN.DWG - PEOPLES, CHARLEY

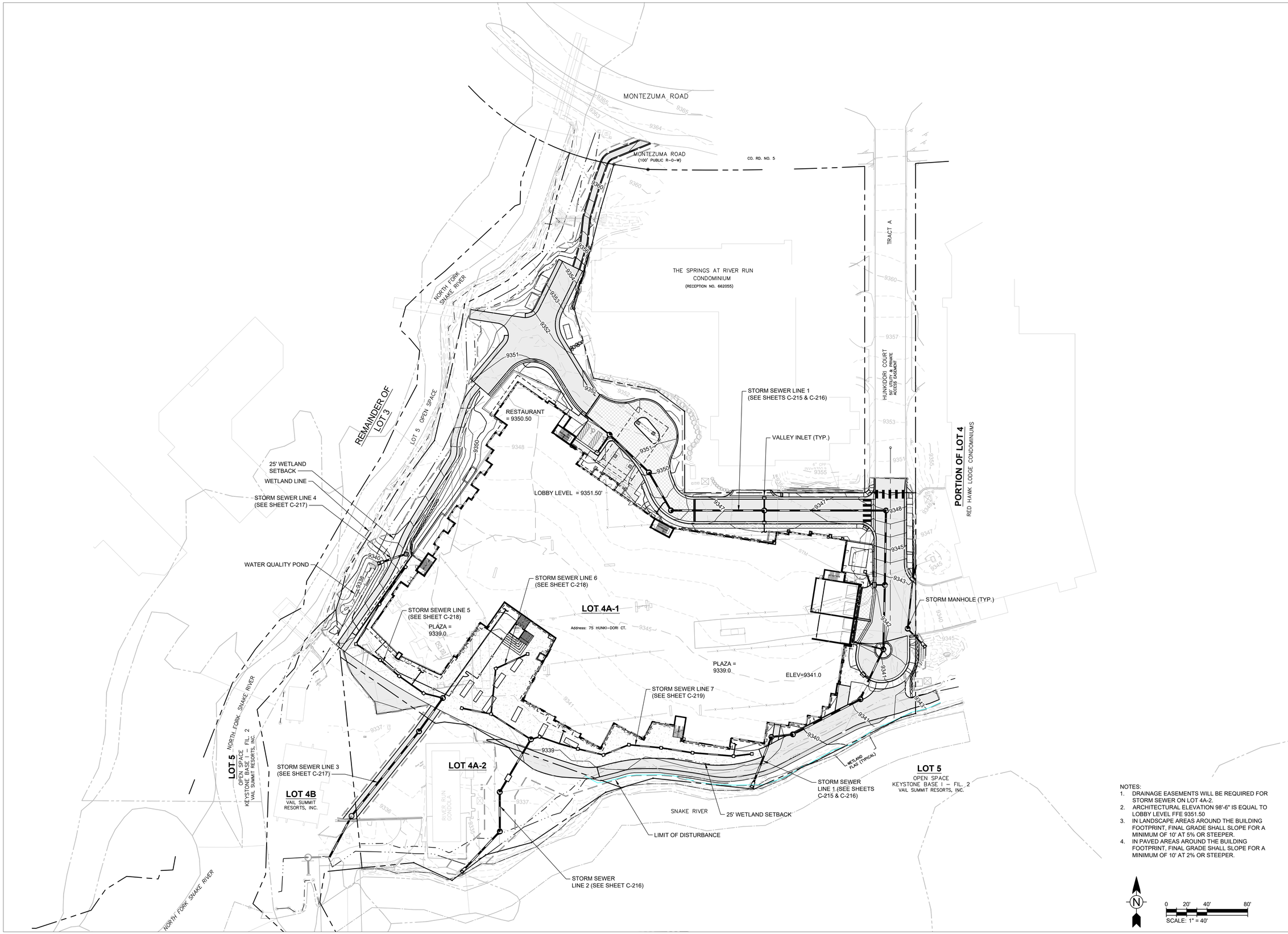


NOTES:

1. DRAINAGE EASEMENTS WILL BE REQUIRED FOR STORM SEWER ON LOT 4A-2.
2. ARCHITECTURAL ELEVATION 98'-6" IS EQUAL TO LOBBY LEVEL FFE 9351.50
3. IN LANDSCAPE AREAS AROUND THE BUILDING FOOTPRINT, FINAL GRADE SHALL SLOPE FOR A MINIMUM OF 10' AT 5% OR STEEPER.
4. IN PAVED AREAS AROUND THE BUILDING FOOTPRINT, FINAL GRADE SHALL SLOPE FOR A MINIMUM OF 10' AT 2% OR STEEPER.

N

0 20' 40' 80'

SCALE: 1" = 40'


OZ ARCHITECTURE

3003 Larimer Street
Denver, Colorado 80205
phone 303.861.5704
www.ozarch.com

TETRA TECH

www.tetratech.com

130 SKI HILL ROAD SUITE 140
BRECKENRIDGE, COLORADO 80424
PHONE: (970)453-6394


# ONE RIVER RUN

## 75 HUNKI DORI CT.
## KEYSTONE, CO 80435

PROJ. NO. 23526-20001
DRAWN: KGS
CHECKED: CDD
APPROVED: CDD
DATE: 2020/06/25

© OZ ARCHITECTURE

ONE RIVER RUN

ISSUED FOR:
ISSUE FOR PERMIT/ ISSUE FOR CONSTRUCTION

SHEET TITLE:
OVERALL GRADING & DRAINAGE PLAN

SCALE: 1" = 40'
SHEET NUMBER

C-105

6/19/2020 1:52:56 PM - O:\PROJECTS\BRECKENRIDGE\23526\200-23526-20001\CAD\SHEETFILES\C105 GRADING AND DRAINAGE PLAN.DWG - PEOPLES, CHARLEY

NOTES:
1. ARCHITECTURAL ELEVATION 98'-6" IS EQUAL TO LOBBY LEVEL FFE 9351.50
2. IN LANDSCAPE AREAS AROUND THE BUILDING FOOTPRINT, FINAL GRADE SHALL SLOPE FOR A MINIMUM OF 10' AT 5% OR STEEPER.
3. IN PAVED AREAS AROUND THE BUILDING FOOTPRINT, FINAL GRADE SHALL SLOPE FOR A MINIMUM OF 10' AT 2% OR STEEPER.

N

0 10' 20' 40'
SCALE: 1" = 20'

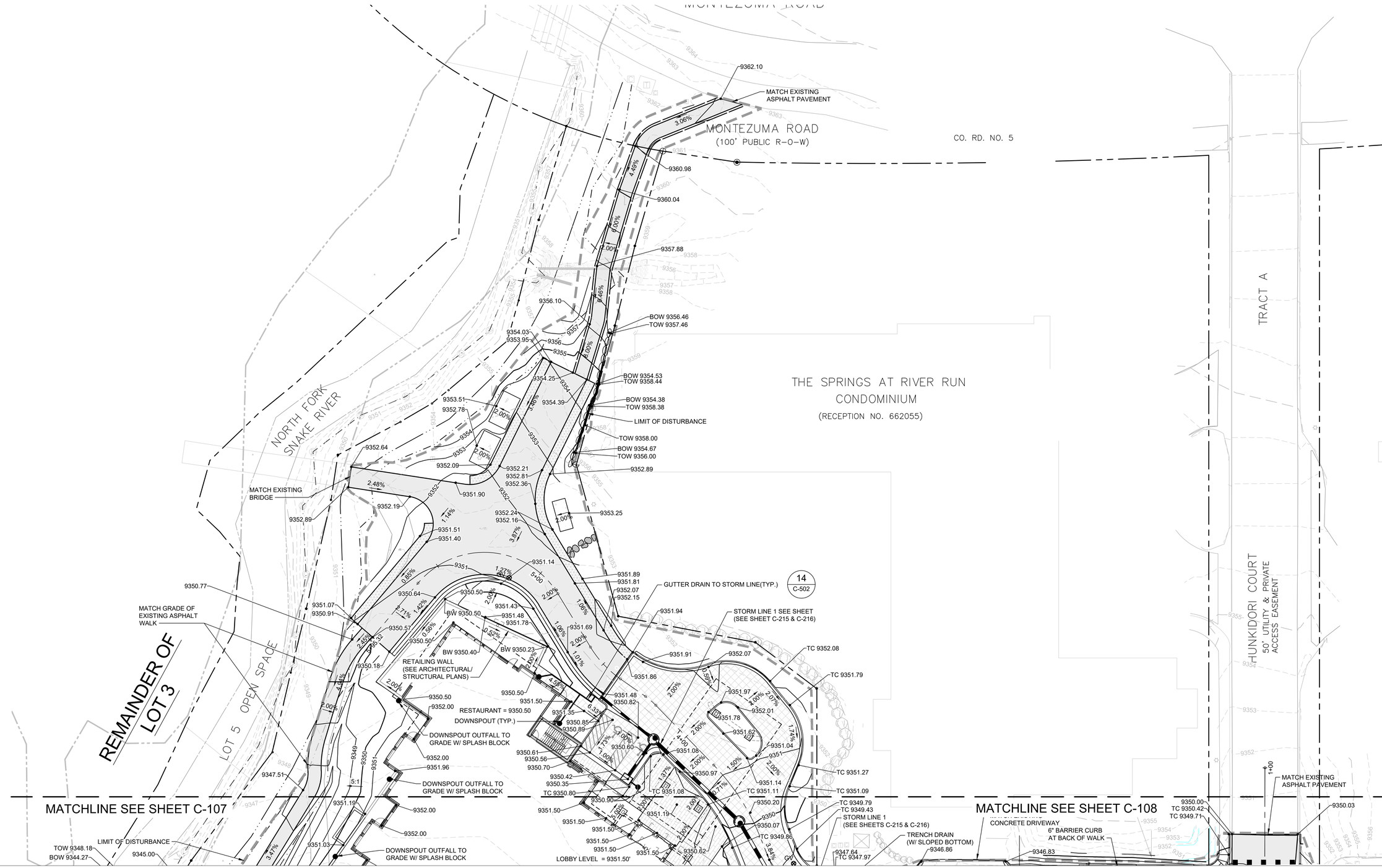



OZ ARCHITECTURE
3003 Larimer Street
Denver, Colorado 80205
phone 303.861.5704
www.ozarch.com

TETRA TECH
www.tetratech.com
130 SKI HILL ROAD SUITE 140
BRECKENRIDGE, COLORADO 80424
PHONE: (970)453-6394


# ONE RIVER RUN
## 75 HUNKI DORI CT.
## KEYSTONE, CO 80435

PROJ. NO. 23526-20001
DRAWN: KGS
CHECKED: CDD
APPROVED: CDD
DATE: 2020/06/25

© OZ ARCHITECTURE

ONE RIVER RUN

ISSUED FOR:
ISSUE FOR PERMIT/ ISSUE FOR CONSTRUCTION

SHEET TITLE:
DETAILED GRADING AND DRAINAGE PLAN

SCALE: 1" = 40'
SHEET NUMBER
C-106

6/19/2020 1:54:00 PM - O:\PROJECTS\BRECKENRIDGE\23526\200-23526-20001\CAD\SHEETFILES\C106 DETAILED GRADING AND DRAINAGE PLAN.DWG - PEOPLES, CHARLEY

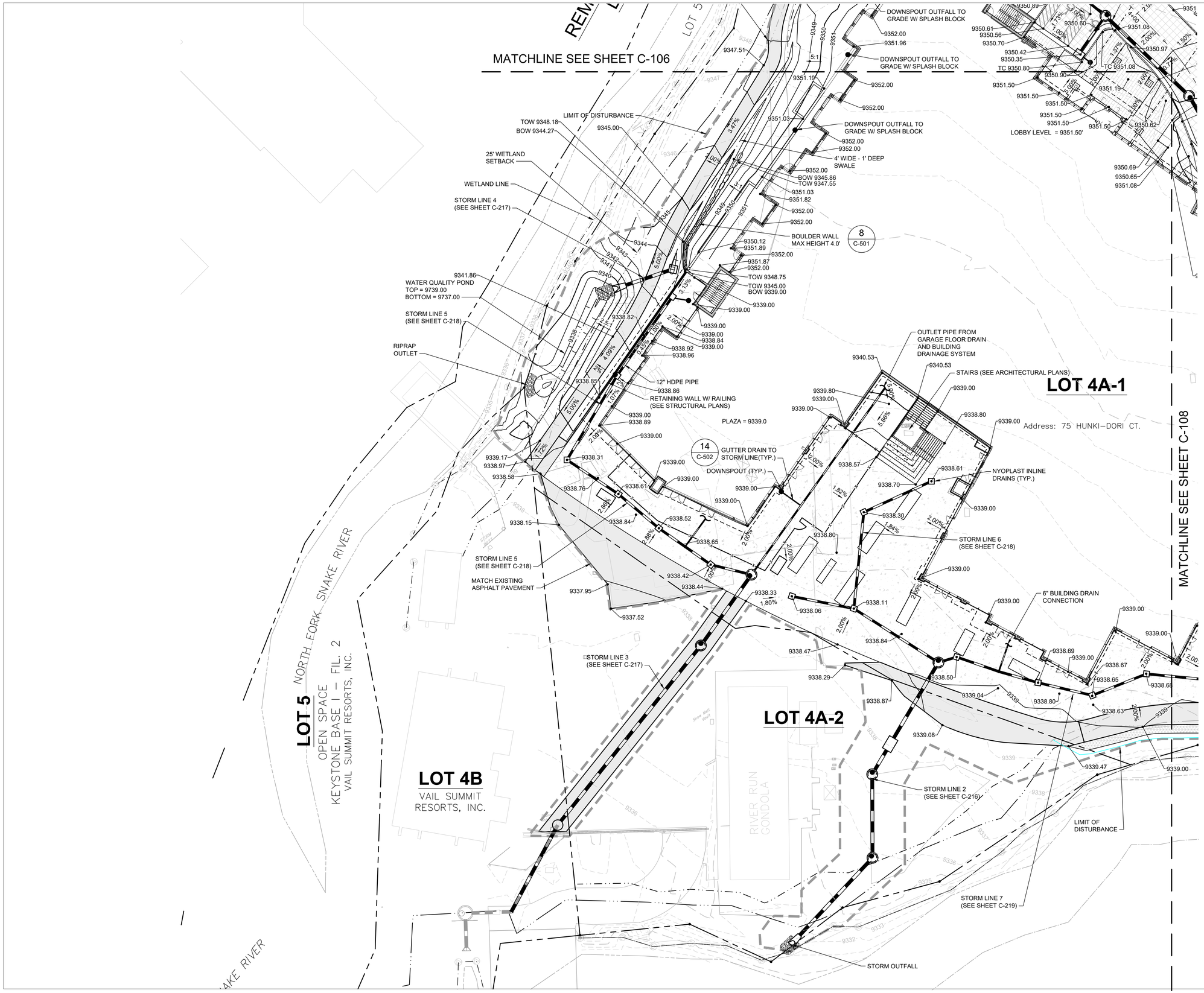


NOTES:
1. ARCHITECTURAL ELEVATION 98'-6" IS EQUAL TO LOBBY LEVEL FFE 9351.50
2. IN LANDSCAPE AREAS AROUND THE BUILDING FOOTPRINT, FINAL GRADE SHALL SLOPE FOR A MINIMUM OF 10' AT 5% OR STEEPER.
3. IN PAVED AREAS AROUND THE BUILDING FOOTPRINT, FINAL GRADE SHALL SLOPE FOR A MINIMUM OF 10' AT 2% OR STEEPER.

N

0 10' 20' 40'
SCALE: 1" = 20'


OZ ARCHITECTURE
3003 Larimer Street
Denver, Colorado 80205
phone 303.861.5704
www.ozarch.com

TETRA TECH
www.tetratech.com
130 SKI HILL ROAD SUITE 140
BRECKENRIDGE, COLORADO 80424
PHONE: (970)453-6394


# ONE RIVER RUN
75 HUNKI DORI CT.
KEYSTONE, CO 80435

PROJ. NO. 23526-20001
DRAWN: KGS
CHECKED: CDD
APPROVED: CDD
DATE: 2020/06/25

© OZ ARCHITECTURE

ONE RIVER RUN

ISSUED FOR:
ISSUE FOR PERMIT/ ISSUE FOR CONSTRUCTION

SHEET TITLE:
DETAILED GRADING AND DRAINAGE PLAN

SCALE: 1" = 40'
SHEET NUMBER
C-107

6/19/2020 1:54:08 PM - O:\PROJECTS\BRECKENRIDGE\23526\200-23526-20001\CAD\SHEETFILES\C106 DETAILED GRADING AND DRAINAGE PLAN.DWG - PEOPLES, CHARLEY

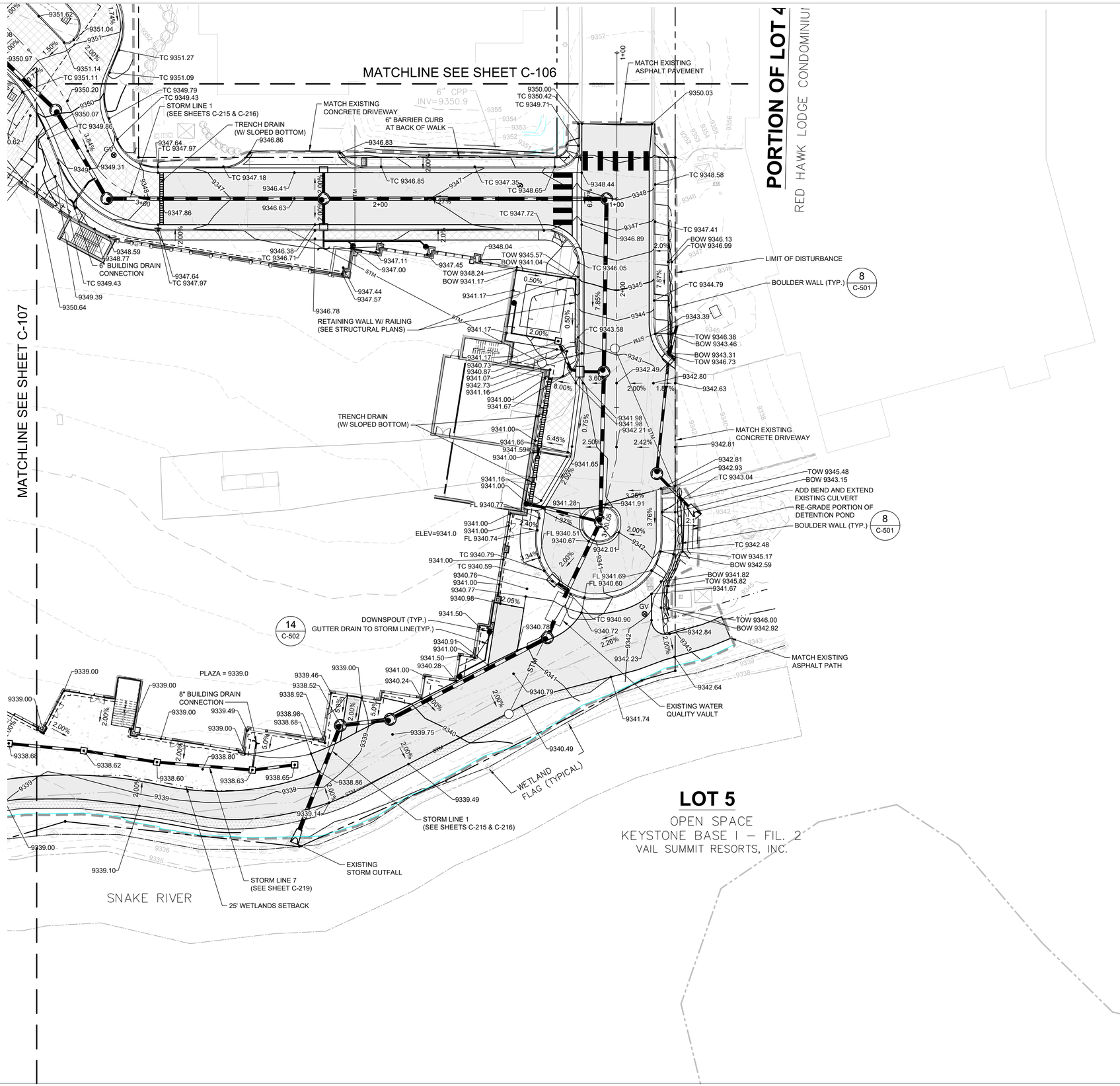


NOTES:
1. ARCHITECTURAL ELEVATION 98'-6" IS EQUAL TO LOBBY LEVEL FFE 9351.50
2. IN LANDSCAPE AREAS AROUND THE BUILDING FOOTPRINT, FINAL GRADE SHALL SLOPE FOR A MINIMUM OF 10' AT 5% OR STEEPER.
3. IN PAVED AREAS AROUND THE BUILDING FOOTPRINT, FINAL GRADE SHALL SLOPE FOR A MINIMUM OF 10' AT 2% OR STEEPER.

N

0 10' 20' 40'
SCALE: 1" = 20'


OZ ARCHITECTURE
3003 Larimer Street
Denver, Colorado 80205
phone 303.861.5704
www.ozarch.com

TETRA TECH
www.tetratech.com
130 SKI HILL ROAD SUITE 140
BRECKENRIDGE, COLORADO 80424
PHONE: (970)453-6394


# ONE RIVER RUN
75 HUNKI DORI CT.
KEYSTONE, CO 80435

| | |
|---|---|
| PROJ. NO. | 23526-20001 |
| DRAWN: | KGS |
| CHECKED: | CDD |
| APPROVED: | CDD |
| DATE: | 2020/06/25 |

© OZ ARCHITECTURE

ONE RIVER RUN

ISSUED FOR:
ISSUE FOR PERMIT/ ISSUE FOR CONSTRUCTION

SHEET TITLE:
DETAILED GRADING AND DRAINAGE PLAN

SCALE: 1" = 40'
SHEET NUMBER
C-108

6/19/2020 1:54:16 PM - O:\PROJECTS\BRECKENRIDGE\23526\200-23526-20001\CAD\SHEETFILES\C106 DETAILED GRADING AND DRAINAGE PLAN.DWG - PEOPLES, CHARLEY

MATCHLINE THIS SHEET

ELECTRIC TRANSFORMER BY XCEL ENERGY

NORTH FORK SNAKE RIVER

TIE NEW GAS LINES TO EXISTING

ELECTRIC SERVICE TO BUILDING

GREASE INTERCEPTOR (SEE MECHANICAL) IE OUT = 9339.50'

69 LF SDR PVC @ 2.0% W/ CLEAN OUTS AS SHOWN

REMAINDER OF LOT 3

LOT 5 OPEN SPACE

ADJUST EXISTING SANITARY SEWER MANHOLE TO FINISH GRADE EX RIM = 9349.59 PROP/RIM = 9351.78

10.00' XCEL EASEMENT

GAS SERVICE STUB BY XCEL ENERGY

EXISTING 12" DIP WATER MAIN

ADJUST EXISTING SANITARY SEWER MANHOLE TO FINISH GRADE EX RIM = 9349.76 PROP RIM = 9349.46

REMOVE OR ABANDON IN PLACE EXISTING WATER LINE

25' STREAMSIDE SETBACK

25' WETLAND SETBACK & EDGE OF BANK SETBACK

EXISTING 35.00' UTILITY EASEMENT

WETLAND BOUNDARY

TIE INTO EXISTING SEWER MAIN W/ NEW MANHOLE

TIE NEW GAS LINE TO EXISTING

UTILITY EASEMENT

DOUBLE VAULT SWITCH CABINET BY XCEL ENERGY (7'10" x 7'6")

EXISTING FIRE HYDRANT

10.00' XCEL EASEMENT

CONNECT TO EX. GAS LINE

CONNECT TO EX. ELECTRIC LINE

4'X6' VAULT BY XCEL ENERGY

LOT 5 OPEN SPACE KEYSTONE BASE I – FIL. 2 VAIL SUMMIT RESORTS, INC.

LOT 4B VAIL SUMMIT RESORTS, INC.

RIVER RUN GONDOLA

LOT 4A-2

REMOVE EXISTING PIPE BACK TO NEAREST PIPE JOINT TO THE NORTH TO CONNECT

42.97 LF 8" CL 52 DIP WATER MAIN

CONNECT TO EXISTING 8" WATER MAIN WITH 45° BEND, AND T.B. AND SOLID SLEEVE

THE SPRINGS AT RIVER RUN CONDOMINIUM (RECEPTION NO. 662055)

BACKUP GENERATOR PAD (SEE MECHANICAL)

REMOVE EXISTING FIRE HYDRANT

WATER LINE 1 SEE PLAN & PROFILE SHEET C-210

NEW FIRE HYDRANT

CLEAN OUT (TYP.) 8 / C-504

CONSTRUCTION OF NEW SEWER MANHOLE CHANNEL TO DIRECT WASTEWATER EAST INTO NEW SEWER MAIN

UTILITY EASEMENT

BUILDING OVERHANG (SEE ARCHITECTURAL PLANS)

UNDERGROUND FOUNDATION WITH 2.5' HORIZONTAL SEPARATION FROM OUTSIDE WALL OF EX. WATER MAIN. BOTTOM OF FOUNDATION AT 9337.80' TO MATCH BOTTOM OF EX. WATER MAIN.

4'x6' VAULT BY XCEL ENERGY

EXISTING WATER STUB TO BE REMOVED. SEE DEMOLITION PLAN

WATER LINE 2 SEE PLAN & PROFILE SHEET C-210

ADJUST EXISTING SANITARY SEWER MANHOLE TO FINISH GRADE EX RIM = 9348.50 PROP RIM = 9348.78

8" 45° SDR 35 PVC BEND

5.89 LF SDR 35 PVC @ 2% MINIMUM CONNECT THE SPRINGS AT RIVER RUN SEWER SERVICE INTO NEW MANHOLE (CONTRACTOR TO VERIFY SIZE AND EXISTING INVERT)

STORM SEWER (TYP)

8" COMBINED DOMESTIC WATER AND FIRE SERVICE

RELOCATE EXISTING FIRE HYDRANT

REMOVE EXISTING SEWER MAINS OR ABANDON IN PLACE

ADJUST EXISTING SANITARY SEWER MANHOLE TO FINISH GRADE EX RIM = 9346.55 PROP RIM = 9346.66

SANITARY SEWER SERVICE 13 LF 6" SDR-35 PVC @ 2.0%

6" CAP & 4"X4" POST N 3656.73 E 7953.09 IE 9340.40

FIRE HYDRANT

STORM SEWER CONNECTION

LOT 4A-1

Address: 75 HUNKI-DORI CT.

GREASE INTERCEPTOR (SEE MECHANICAL)

SANITARY SEWER LINE A (SEE SHEET C-206)

6'X12' VAULT BY XCEL ENERGY

UTILITY EASEMENT

BUILDING FOOTPRINT

TRACT A

HUNKIDORI COURT 50' UTILITY & PRIVATE ACCESS EASEMENT

CONNECT TO EXISTING SANITARY SEWER MAIN

WATER LINE 3 SEE PLAN & PROFILE SHEET C-210

ADJUST EXISTING (3) WATER VALVES TO FINISH GRADE

PORTION OF LOT 4 RED HAWK LODGE CONDOMINIUMS

ADJUST EXISTING SANITARY SEWER MANHOLE TO FINISH GRADE EX. RIM=9347.94 PROP. RIM=9347.27

CONNECT RED HAWK LODGE SANITARY SEWER SERVICE INTO MANHOLE B1

SANITARY SEWER LINE B (SEE SHEET C-206)

UTILITY EASEMENT

TIE NEW GAS LINE TO EXISTING

WATER LINE 4 SEE PLAN & PROFILE SHEET C-210

SANITARY SEWER LINE A (SEE SHEET C-206)

WETLAND FLAG (TYPICAL)

LOT 5 OPEN SPACE KEYSTONE BASE I – FIL. 2 VAIL SUMMIT RESORTS, INC.

RELOCATED EXISTING ELECTRIC TO GONDOLA IN XCEL FEEDER TRENCH

SNAKE RIVER

EXISTING FIBER OPTIC LINE TO REMAIN

EXISTING FIRE HYDRANT

25' STREAMSIDE SETBACK

MONTEZUMA ROAD

SWITCH CABINET BY XCEL ENERGY

MONTEZUMA ROAD (100' PUBLIC R-O-W)

MATCHLINE THIS SHEET

NOTES:

1. SITE LOCATIONS AND SIZE FOR GREASE INTERCEPTORS TO BE CONFIRMED BY PLUMBING ENGINEER.
2. ELECTRIC, GAS AND COMMUNICATION UTILITY DESIGN FOR REMOVAL, RELOCATION AND PROVIDING NEW SERVICE SHALL BE PROVIDED BY INDIVIDUAL UTILITY COMPANIES.
3. SEE SHEET C-504 FOR ALL SANITARY SEWER DETAILS.
4. CONTRACTOR TO FIELD VERIFY LOCATIONS AND ELEVATIONS OF EXISTING UTILITIES PRIOR TO CONSTRUCTION.
5. ALL EXISTING UTILITIES THAT ARE ABANDONED IN PLACE SHALL BE FILLED WITH FLOW FILL.
6. SEE ELECTRICAL PLANS FOR THE DESIGN OF COMMUNICATIONS UTILITY SERVICES TO THE BUILDINGS.

N

0 15' 30' 60'

SCALE: 1" = 30'


OZ ARCHITECTURE

3003 Larimer Street
Denver, Colorado 80205
phone 303.861.5704
www.ozarch.com

TETRA TECH
www.tetratech.com
130 SKI HILL ROAD SUITE 140
BRECKENRIDGE, COLORADO 80424
PHONE: (970)453-6394


# ONE RIVER RUN

75 HUNKI DORI CT.
KEYSTONE, CO 80435

PROJ. NO. 23526-20001
DRAWN: KGS
CHECKED: CDD
APPROVED: CDD
DATE: 2020/06/25

© OZ ARCHITECTURE

ONE RIVER RUN

ISSUED FOR:
ISSUE FOR PERMIT/ ISSUE FOR CONSTRUCTION

SHEET TITLE:
COMPOSITE UTILITY PLAN

SCALE: 1" = 30'
SHEET NUMBER

C-109

6/19/2020 1:55:07 PM - O:\PROJECTS\BRECKENRIDGE\23526\200-23526-20001\CAD\SHEETFILES\C106 COMPOSITE UTILITY PLAN.DWG - PEOPLES, CHARLEY

MATCHLINE THIS SHEET

F
WETLAND SETBACK DISTURBANCE
FOR PATH CONNECTION, DRAINAGE
IMPROVEMENT AND GRADING
EXISTING AREA = 108 SF
NEW AREA = 661 SF

E
WETLAND SETBACK DISTURBANCE
FOR EXISTING PATH REPAVING
EXISTING AREA = 140 SF
NEW AREA = 164 SF

D
TEMPORARY WETLAND SETBACK
DISTURBANCE FOR REPAVING EXISTING
ASPHALT PATH
EXISTING AREA = 351 SF
NEW AREA = 355 SF

C
WETLAND SETBACK DISTURBANCE FOR BUILDING
REMOVAL, UTILITY CONNECTION AND WATER
QUALITY POND IMPROVEMENT
EXISTING AREA = 313 SF
NEW AREA = 2365 SF

A
WETLAND SETBACK DISTURBANCE FOR
UTILITY CONNECTION AND FINAL BIKE PATH/
FIRE ACCESS CONSTRUCTION
EXISTING AREA = 3497 SF
NEW AREA = 10,185 SF

B
TEMPORARY WETLAND SETBACK DISTURBANCE
FOR STORM SEWER OUTFALL INSTALLATION
EXISTING AREA = 222 SF
NEW AREA = 1300 SF

THE SPRINGS AT RIVER RUN
CONDOMINIUM
(RECEPTION NO. 662055)

TRACT A

HUNKIDORI COURT
50' UTILITY & PRIVATE
ACCESS EASEMENT

MONTEZUMA ROAD

MONTEZUMA ROAD
(100' PUBLIC R-O-W)

MATCHLINE THIS SHEET

PORTION OF LOT 4
RED HAWK LODGE CONDOMINIUMS

REMAINDER OF
LOT 3

LOT 5 OPEN SPACE

NORTH FORK
SNAKE RIVER

25' STREAMSIDE SETBACK

25' WETLAND SETBACK &
EDGE OF BANK SETBACK

WETLAND LINE

6" CPP
INV=9350.9

FH

LOT 4A-1

Address: 75 HUNKI-DORI CT.

LOT 4A-2

RIVER RUN
GONDOLA

LOT 4B
VAIL SUMMIT
RESORTS, INC.

LOT 5
OPEN SPACE
KEYSTONE BASE I - FIL. 2
VAIL SUMMIT RESORTS, INC.

LIMIT OF DISTURBANCE

WETLAND
FLAG (TYPICAL)

25' WETLAND SETBACK &
EDGE OF BANK SETBACK

25' STREAMSIDE SETBACK

SNAKE RIVER

NOTES:
1. EXISTING AREA RELATES TO EXISTING IMPERVIOUS SURFACES WITHIN EACH DISTURBANCE AREA. PAVEMENT, GRAVEL, BUILDINGS.
2. SEE WETLAND DELINEATION REPORT AND MITIGATION PLAN BY CLAFFEY ECOLOGICAL CONSULTANTS.

N

0 15' 30' 60'
SCALE: 1" = 30'


OZ ARCHITECTURE
3003 Larimer Street
Denver, Colorado 80205
phone 303.861.5704
www.ozarch.com

TETRA TECH
www.tetratech.com
130 SKI HILL ROAD SUITE 140
BRECKENRIDGE, COLORADO 80424
PHONE: (970)453-6394


# ONE RIVER RUN
## 75 HUNKI DORI CT.
## KEYSTONE, CO 80435

PROJ. NO. 23526-20001
DRAWN: KGS
CHECKED: CDD
APPROVED: CDD
DATE: 2020/06/25

© OZ ARCHITECTURE

ONE RIVER RUN

ISSUED FOR:
ISSUE FOR PERMIT/ ISSUE FOR CONSTRUCTION

SHEET TITLE:
WETLAND SETBACK DISTURBANCE EXHIBIT

SCALE: 1" = 30'
SHEET NUMBER
C-110

6/19/2020 1:55:53 PM - O:\PROJECTS\BRECKENRIDGE\23526\200-23526-20001\CAD\SHEETFILES\C108 WETLAND SETBACK DISTURBANCE.DWG - PEOPLES, CHARLEY

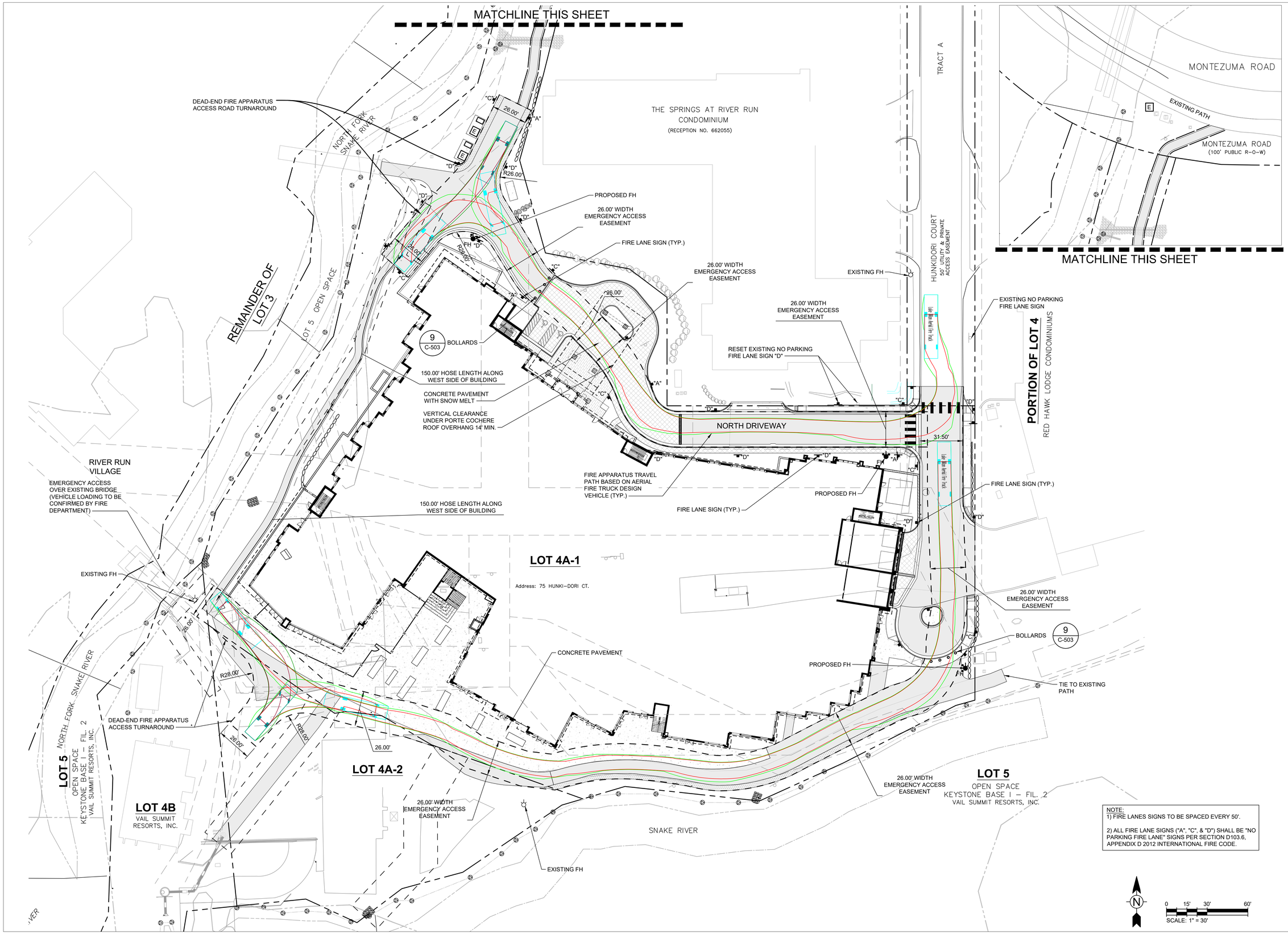


NOTE:
1) FIRE LANES SIGNS TO BE SPACED EVERY 50'.

2) ALL FIRE LANE SIGNS ("A", "C", & "D") SHALL BE "NO PARKING FIRE LANE" SIGNS PER SECTION D103.6, APPENDIX D 2012 INTERNATIONAL FIRE CODE.

OZ ARCHITECTURE
3003 Larimer Street
Denver, Colorado 80205
phone 303.861.5704
www.ozarch.com

TETRA TECH
www.tetratech.com
130 SKI HILL ROAD SUITE 140
BRECKENRIDGE, COLORADO 80424
PHONE: (970)453-6394

# ONE RIVER RUN
## 75 HUNKI DORI CT.
## KEYSTONE, CO 80435

PROJ. NO. 23526-20001
DRAWN: KGS
CHECKED: CDD
APPROVED: CDD
DATE: 2020/06/25

© OZ ARCHITECTURE

ONE RIVER RUN

ISSUED FOR:
ISSUE FOR PERMIT/ ISSUE FOR CONSTRUCTION

SHEET TITLE:
FIRE ACCESS EXHIBIT

SCALE: 1" = 30'
SHEET NUMBER
C-111

6/19/2020 1:56:40 PM - O:\PROJECTS\BRECKENRIDGE\23526\200-23526-20001\CAD\SHEETFILES\C109 FIRE ACCESS EXHIBIT.DWG - PEOPLES, CHARLEY

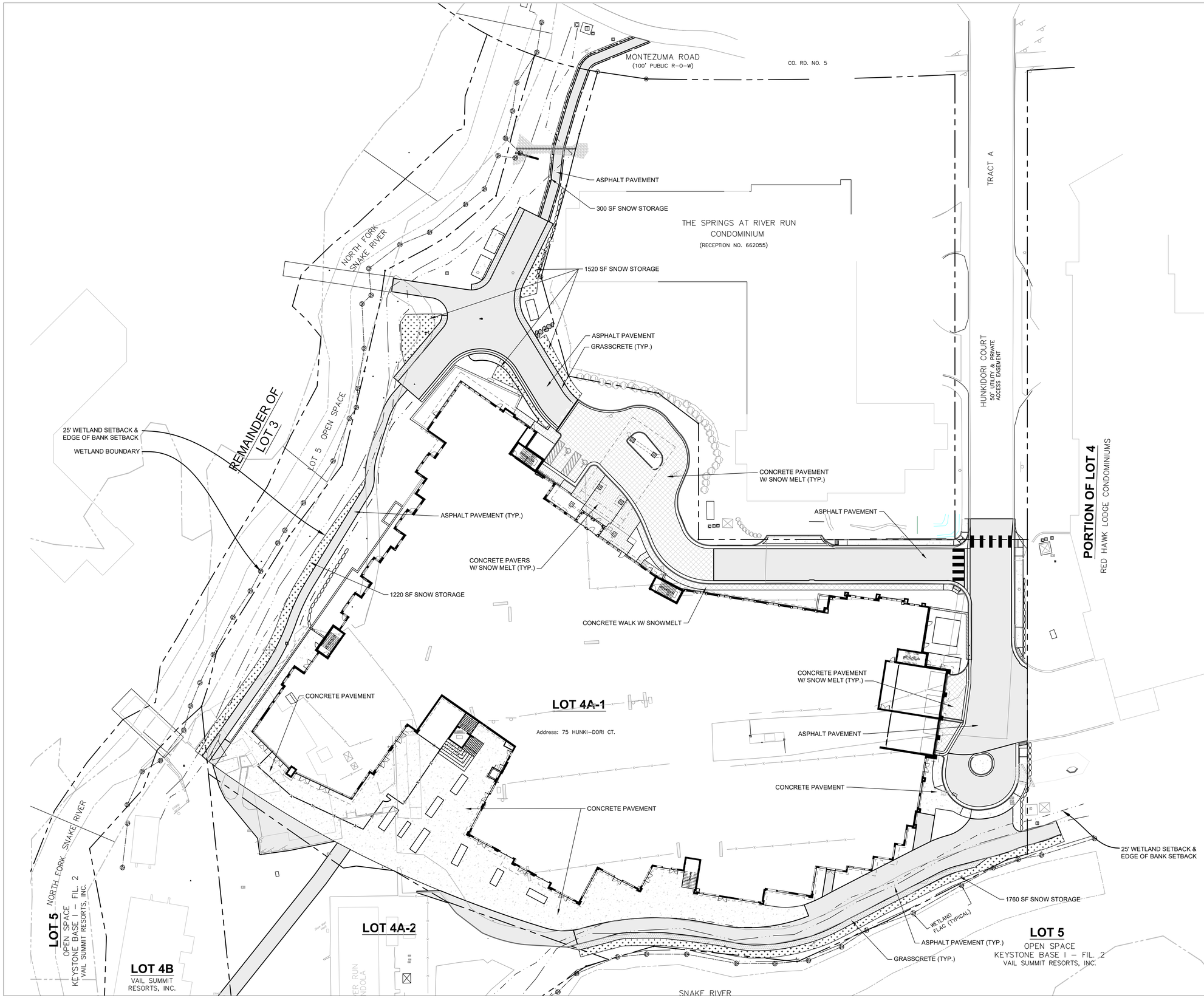


| SNOW STORAGE TABLE | |
|---|---|
| SNOW MELTED PAVEMENT | 10,600.00 SQ. FT. |
| NON SNOW MELTED PAVEMENT | 51,475.00 SQ. FT. |
| SNOW STORAGE REQUIREMENT | 12868.75 SQ. FT. |
| SNOW STORAGE PROVIDED | 4800.00 SQ. FT. |
| SNOW STORAGE AREA TO BE HAULED OFFSITE PER PUD | 8068.75 SQ. FT. |

NOTES:
1. A PORTION OF THE SITE WILL REQUIRE SNOW TO BE HAULED OFFSITE AT TIMES AS PART OF SNOW MANAGEMENT PLAN.
2. ALL SNOW MELT PAVEMENT CALLED OUT ON PLAN.


OZ ARCHITECTURE
3003 Larimer Street
Denver, Colorado 80205
phone 303.861.5704
www.ozarch.com

TETRA TECH
www.tetratech.com
130 SKI HILL ROAD SUITE 140
BRECKENRIDGE, COLORADO 80424
PHONE: (970)453-6394


# ONE RIVER RUN
## 75 HUNKI DORI CT.
## KEYSTONE, CO 80435

PROJ. NO. 23526-20001
DRAWN: KGS
CHECKED: CDD
APPROVED: CDD
DATE: 2020/06/25

© OZ ARCHITECTURE

ONE RIVER RUN

ISSUED FOR:
ISSUE FOR PERMIT/ ISSUE FOR CONSTRUCTION

SHEET TITLE:
SNOW STORAGE PLAN

SCALE: 1" = 30'
SHEET NUMBER
C-112

6/19/2020 1:57:02 PM - O:\PROJECTS\BRECKENRIDGE\23526\200-23526-20001\CAD\SHEETFILES\C107 SNOW MANAGEMENT PLAN.DWG - PEOPLES, CHARLEY

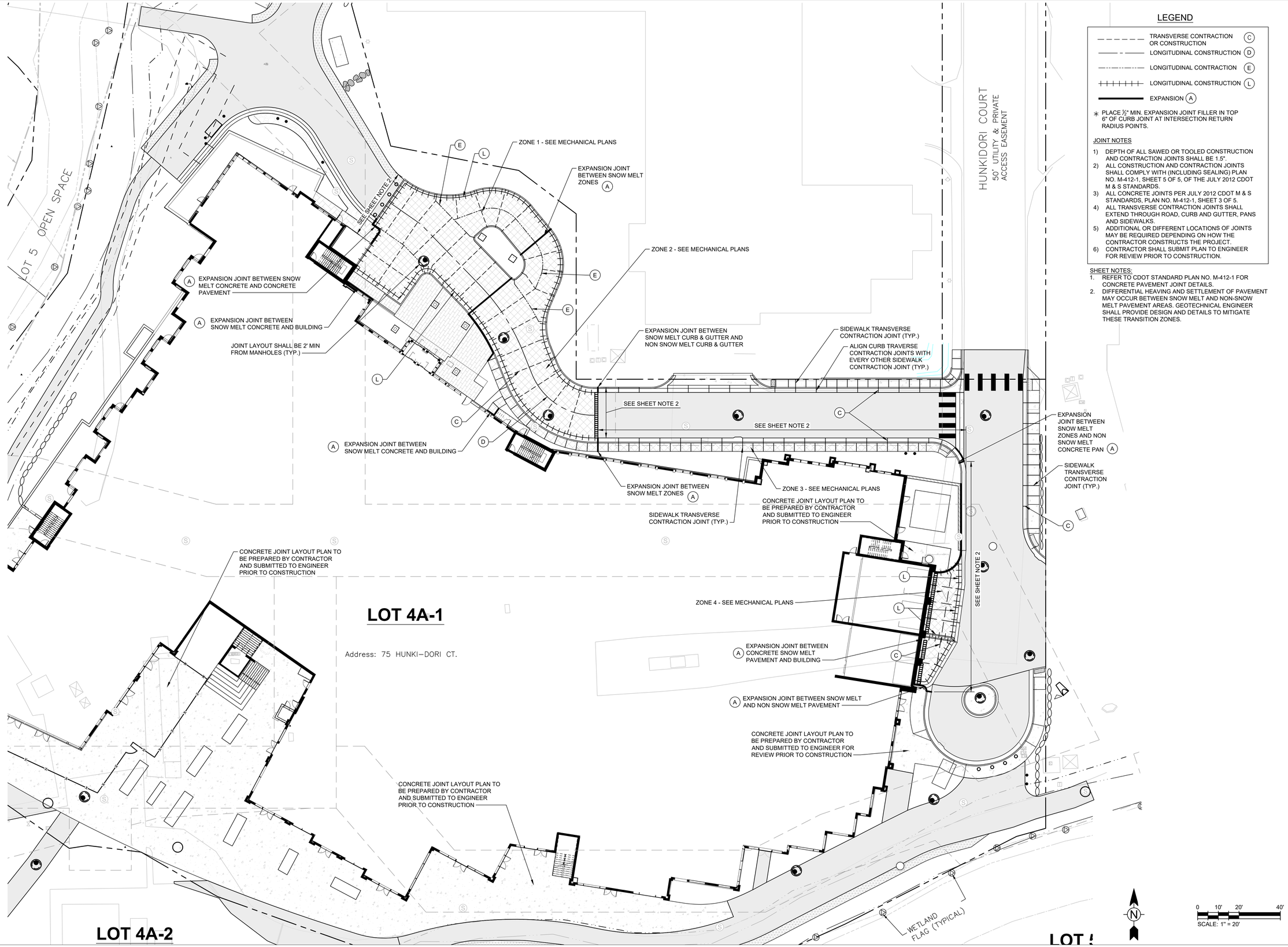


## LEGEND

| | |
|---|---|
| TRANSVERSE CONTRACTION OR CONSTRUCTION | (C) |
| LONGITUDINAL CONSTRUCTION | (D) |
| LONGITUDINAL CONTRACTION | (E) |
| LONGITUDINAL CONSTRUCTION | (L) |
| EXPANSION | (A) |

* PLACE ½" MIN. EXPANSION JOINT FILLER IN TOP 6" OF CURB JOINT AT INTERSECTION RETURN RADIUS POINTS.

JOINT NOTES

1) DEPTH OF ALL SAWED OR TOOLED CONSTRUCTION AND CONTRACTION JOINTS SHALL BE 1.5".
2) ALL CONSTRUCTION AND CONTRACTION JOINTS SHALL COMPLY WITH (INCLUDING SEALING) PLAN NO. M-412-1, SHEET 5 OF 5, OF THE JULY 2012 CDOT M & S STANDARDS.
3) ALL CONCRETE JOINTS PER JULY 2012 CDOT M & S STANDARDS, PLAN NO. M-412-1, SHEET 3 OF 5.
4) ALL TRANSVERSE CONTRACTION JOINTS SHALL EXTEND THROUGH ROAD, CURB AND GUTTER, PANS AND SIDEWALKS.
5) ADDITIONAL OR DIFFERENT LOCATIONS OF JOINTS MAY BE REQUIRED DEPENDING ON HOW THE CONTRACTOR CONSTRUCTS THE PROJECT.
6) CONTRACTOR SHALL SUBMIT PLAN TO ENGINEER FOR REVIEW PRIOR TO CONSTRUCTION.

SHEET NOTES:

1. REFER TO CDOT STANDARD PLAN NO. M-412-1 FOR CONCRETE PAVEMENT JOINT DETAILS.
2. DIFFERENTIAL HEAVING AND SETTLEMENT OF PAVEMENT MAY OCCUR BETWEEN SNOW MELT AND NON-SNOW MELT PAVEMENT AREAS. GEOTECHNICAL ENGINEER SHALL PROVIDE DESIGN AND DETAILS TO MITIGATE THESE TRANSITION ZONES.


OZ ARCHITECTURE
3003 Larimer Street
Denver, Colorado 80205
phone 303.861.5704
www.ozarch.com

TETRA TECH
www.tetratech.com
130 SKI HILL ROAD SUITE 140
BRECKENRIDGE, COLORADO 80424
PHONE: (970)453-6394


# ONE RIVER RUN
## 75 HUNKI DORI CT.
## KEYSTONE, CO 80435

PROJ. NO. 23526-20001
DRAWN: KGS
CHECKED: CDD
APPROVED: CDD
DATE: 2020/06/25

© OZ ARCHITECTURE

ONE RIVER RUN

ISSUED FOR:
ISSUE FOR PERMIT/ ISSUE FOR CONSTRUCTION

SHEET TITLE:
CONCRETE PAVING
JOINT LAYOUT PLAN

SCALE: 1" = 20'
SHEET NUMBER
C-113

6/19/2020 1:57:51 PM - O:\PROJECTS\BRECKENRIDGE\23526\200-23526-20001\CAD\SHEETFILES\C113 CONCRETE PAVING JOINT LAYOUT.DWG - PEOPLES, CHARLEY

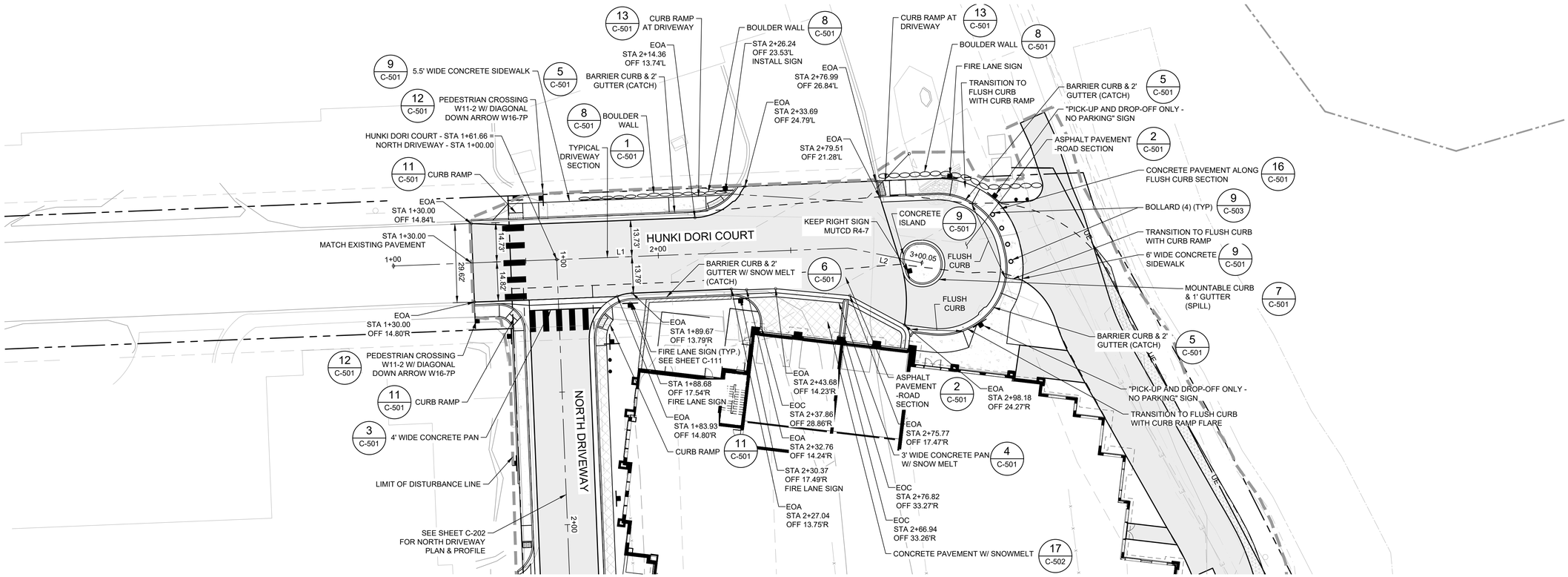


## PLAN VIEW - HUNKI DORI COURT

SCALE: 1"=20'

| HUNKI DORI COURT CENTERLINE ALIGNMENT TABLE | | | | | |
|---|---|---|---|---|---|
| NUMBER | LENGTH | RADIUS | LINE/CHORD DIRECTION | START NORTHING & EASTING | END NORTHING & EASTING |
| L1 | 171.58' | | S0° 03' 55.56"W | N: 3736.644 E: 8021.146 | N: 3565.061 E: 8020.950 |
| L2 | 28.46' | | S13° 32' 58.08"W | N: 3565.061 E: 8020.950 | N: 3537.389 E: 8014.281 |

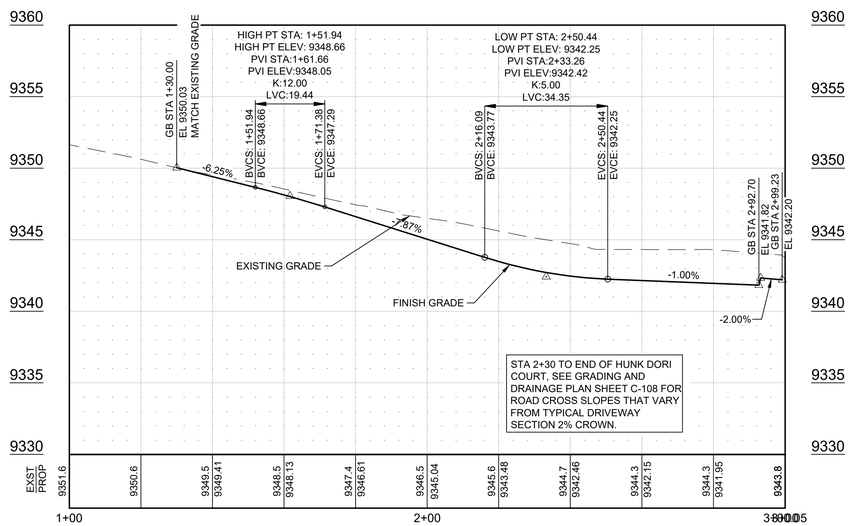


## PROFILE VIEW - HUNKI DORI COURT

SCALE: VERT: 1"=20' HORIZ: 1"=5'


OZ ARCHITECTURE
3003 Larimer Street
Denver, Colorado 80205
phone 303.861.5704
www.ozarch.com

TETRA TECH
www.tetratech.com
130 SKI HILL ROAD SUITE 140
BRECKENRIDGE, COLORADO 80424
PHONE: (970)453-6394


# ONE RIVER RUN
## 75 HUNKI DORI CT.
## KEYSTONE, CO 80435

PROJ. NO. 23526-20001
DRAWN: KGS
CHECKED: CDD
APPROVED: CDD
DATE: 2020/06/25

© OZ ARCHITECTURE

ONE RIVER RUN

ISSUED FOR:
ISSUE FOR PERMIT/ ISSUE FOR CONSTRUCTION

SHEET TITLE:
HUNKI DORI COURT PLAN & PROFILE

SCALE: 1" = 20'
SHEET NUMBER
C-201

0 10' 20' 40'
SCALE: 1" = 20'

6/19/2020 1:59:09 PM - O:\PROJECTS\BRECKENRIDGE\23526\200-23526-20001\CAD\SHEETFILES\C-201 HUNKI DORI COURT PLAN & PROFILE.DWG - PEOPLES, CHARLEY

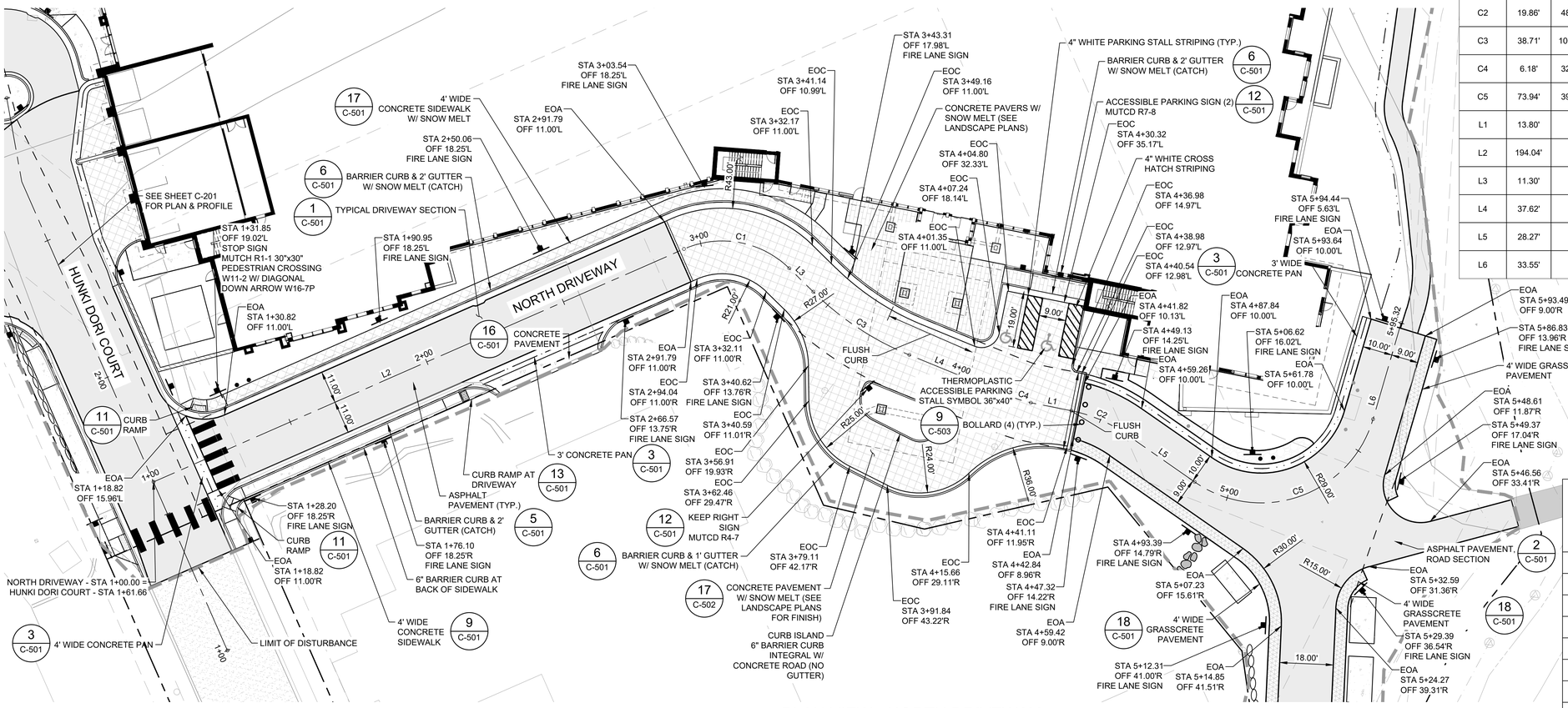


## PLAN VIEW - NORTH DRIVEWAY

SCALE: 1"=20'

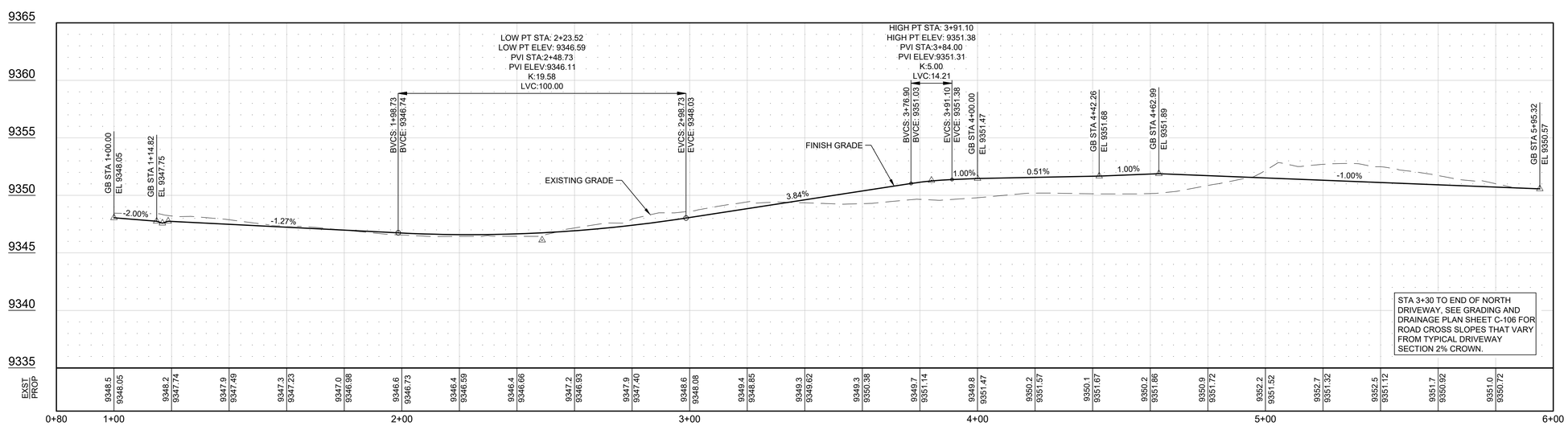


## PROFILE VIEW - NORTH DRIVEWAY

SCALE: VERT: 1"=20' HORIZ: 1"=5'

### NORTH DRIVEWAY CENTERLINE ALIGNMENT TABLE

| NUMBER | LENGTH | RADIUS | LINE/CHORD DIRECTION | START NORTHING & EASTING | END NORTHING & EASTING |
|---|---|---|---|---|---|
| C1 | 38.07' | 32.00' | N55° 55' 09.98"W | N: 3674.984 E: 7827.035 | N: 3695.081 E: 7797.332 |
| C2 | 19.86' | 48.00' | N43° 13' 46.25"W | N: 3776.815 E: 7730.066 | N: 3791.180 E: 7716.562 |
| C3 | 38.71' | 100.00' | N32° 55' 44.86"W | N: 3705.574 E: 7793.127 | N: 3737.864 E: 7772.214 |
| C4 | 6.18' | 32.00' | N49° 33' 00.49"W | N: 3764.916 E: 7746.072 | N: 3768.918 E: 7741.378 |
| C5 | 73.94' | 39.00' | N85° 41' 20.64"W | N: 3815.312 E: 7701.845 | N: 3820.074 E: 7638.673 |
| L1 | 13.80' | | N55° 04' 51.21"W | N: 3768.918 E: 7741.378 | N: 3776.815 E: 7730.066 |
| L2 | 194.04' | | N90° 00' 00.00"W | N: 3674.984 E: 8021.075 | N: 3674.984 E: 7827.035 |
| L3 | 11.30' | | N21° 50' 19.97"W | N: 3695.081 E: 7797.332 | N: 3705.574 E: 7793.127 |
| L4 | 37.62' | | N44° 01' 09.76"W | N: 3737.864 E: 7772.214 | N: 3764.916 E: 7746.072 |
| L5 | 28.27' | | N31° 22' 41.28"W | N: 3791.180 E: 7716.562 | N: 3815.312 E: 7701.845 |
| L6 | 33.55' | | S40° 00' 00.00"W | N: 3820.074 E: 7638.673 | N: 3794.376 E: 7617.109 |

### NORTH DRIVEWAY CROSS SLOPE TRANSITION TABLE

| STA | L | R |
|---|---|---|
| 1+18.82 | -5.32% | 5.32% |
| 1+23.82 | -4.32% | 4.32% |
| 1+28.82 | -3.32% | 3.32% |
| 1+33.82 | -2.32% | 2.32% |
| 1+38.82 | -2.00% | 1.32% |
| 1+43.82 | -2.00% | 0.32% |
| 1+48.82 | -2.00% | -0.68% |
| 1+55.00 | -2.00% | -2.00% |


OZ ARCHITECTURE
3003 Larimer Street
Denver, Colorado 80205
phone 303.861.5704
www.ozarch.com

TETRA TECH
www.tetratech.com
130 SKI HILL ROAD SUITE 140
BRECKENRIDGE, COLORADO 80424
PHONE: (970)453-6394


# ONE RIVER RUN
75 HUNKI DORI CT.
KEYSTONE, CO 80435

PROJ. NO. 23526-20001
DRAWN: KGS
CHECKED: CDD
APPROVED: CDD
DATE: 2020/06/25

© OZ ARCHITECTURE

ONE RIVER RUN

ISSUED FOR:
ISSUE FOR PERMIT/ ISSUE FOR CONSTRUCTION

SHEET TITLE:
NORTH DRIVEWAY PLAN & PROFILE

SCALE: 1" = 20'
SHEET NUMBER
C-202

0 10' 20' 40'
SCALE: 1" = 20'

6/19/2020 2:00:45 PM - O:\PROJECTS\BRECKENRIDGE\23526\200-23526-20001\CAD\SHEETFILES\C-202 DRIVEWAY PLAN & PROFILE.DWG - PEOPLES, CHARLEY

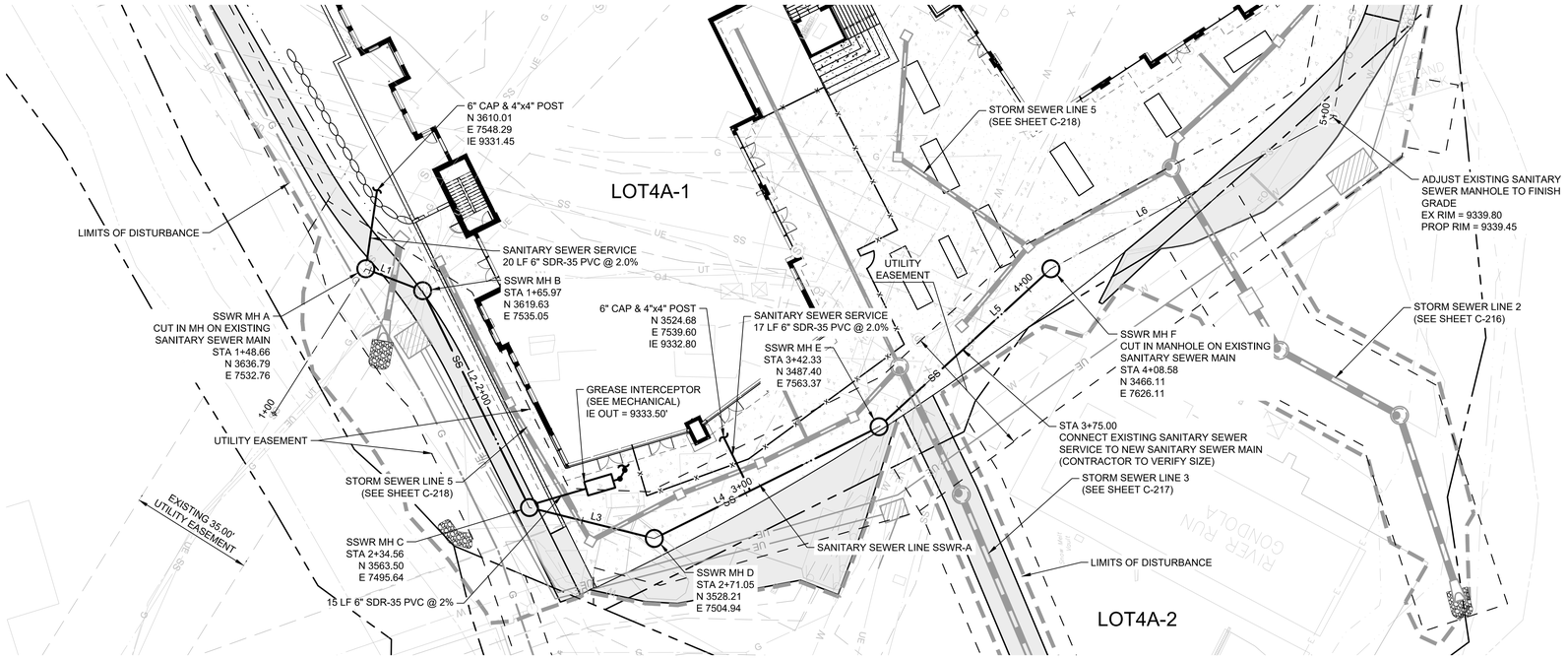


## PLAN VIEW - SSWR-A

SCALE: 1"=20'

NOTES:

1. SEE SHEET C-504 FOR ALL SANITARY SEWER DETAILS.
2. CONTRACTOR TO FIELD VERIFY LOCATION AND ELEVATION OF EXISTING SANITARY SEWER PRIOR TO CONSTRUCTION.

| SSWR-A CENTERLINE ALIGNMENT TABLE | | | | | |
|---|---|---|---|---|---|
| NUMBER | LENGTH | RADIUS | LINE/CHORD DIRECTION | START NORTHING & EASTING | END NORTHING & EASTING |
| L1 | 17.31' | | S7° 35' 07.76"E | N: 3636.790<br>E: 7532.763 | N: 3619.629<br>E: 7535.048 |
| L2 | 68.59' | | S35° 04' 26.93"W | N: 3619.629<br>E: 7535.048 | N: 3563.496<br>E: 7495.635 |
| L3 | 36.49' | | S14° 46' 14.40"E | N: 3563.496<br>E: 7495.635 | N: 3528.209<br>E: 7504.939 |
| L4 | 71.27' | | S55° 04' 15.77"E | N: 3528.209<br>E: 7504.939 | N: 3487.402<br>E: 7563.372 |
| L5 | 66.25' | | S71° 15' 14.47"E | N: 3487.402<br>E: 7563.372 | N: 3466.111<br>E: 7626.107 |
| L6 | 90.93' | | S56° 53' 15.15"E | N: 3466.111<br>E: 7626.107 | N: 3416.436<br>E: 7702.272 |

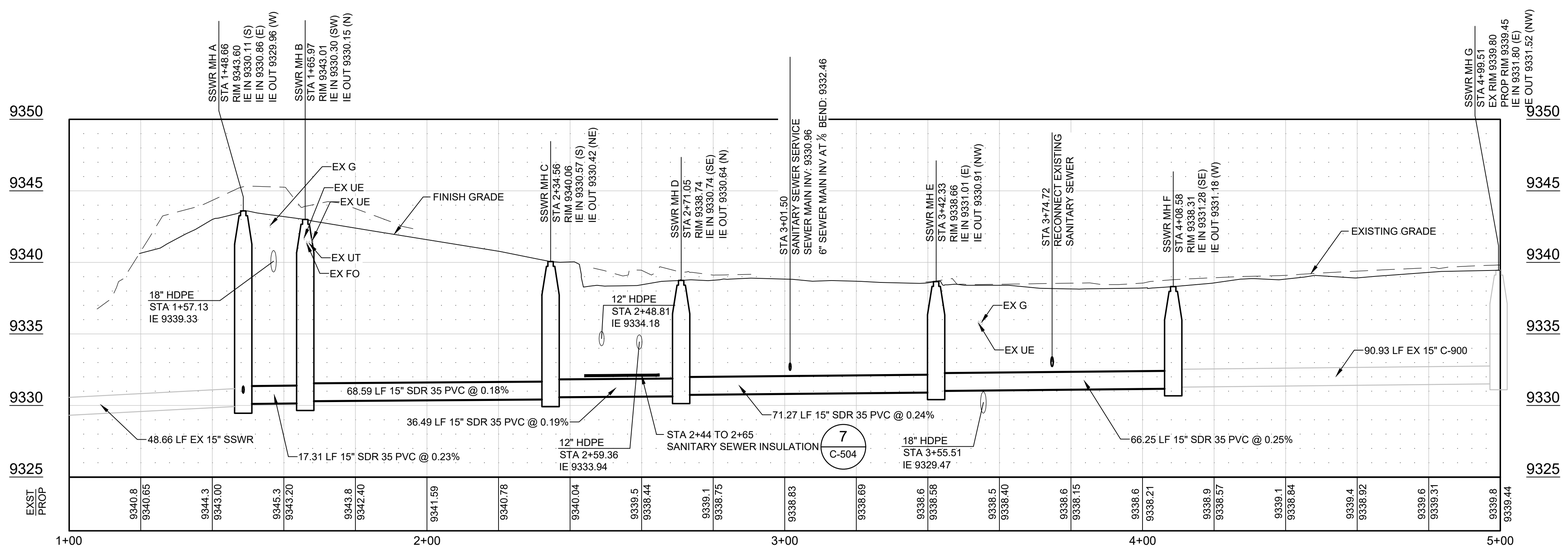


## PROFILE VIEW - SSWR-A

SCALE: VERT: 1"=20' HORIZ: 1"=5'


OZ ARCHITECTURE
3003 Larimer Street
Denver, Colorado 80205
phone 303.861.5704
www.ozarch.com

TETRA TECH
www.tetratech.com
130 SKI HILL ROAD SUITE 140
BRECKENRIDGE, COLORADO 80424
PHONE: (970)453-6394


# ONE RIVER RUN
75 HUNKI DORI CT.
KEYSTONE, CO 80435

PROJ. NO. 23526-20001
DRAWN: KGS
CHECKED: CDD
APPROVED: CDD
DATE: 2020/06/25

© OZ ARCHITECTURE

ONE RIVER RUN

ISSUED FOR:
ISSUE FOR PERMIT/ ISSUE FOR CONSTRUCTION

SHEET TITLE:
SANITARY SEWER A PLAN & PROFILE

SCALE: 1" = 20'
SHEET NUMBER

C-205

0 10' 20' 40'
SCALE: 1" = 20'

6/19/2020 2:01:56 PM - O:\PROJECTS\BRECKENRIDGE\23526\200-23526-20001\CAD\SHEETFILES\C-205 SANITARY SEWER A PLAN & PROFILE.DWG - PEOPLES, CHARLEY

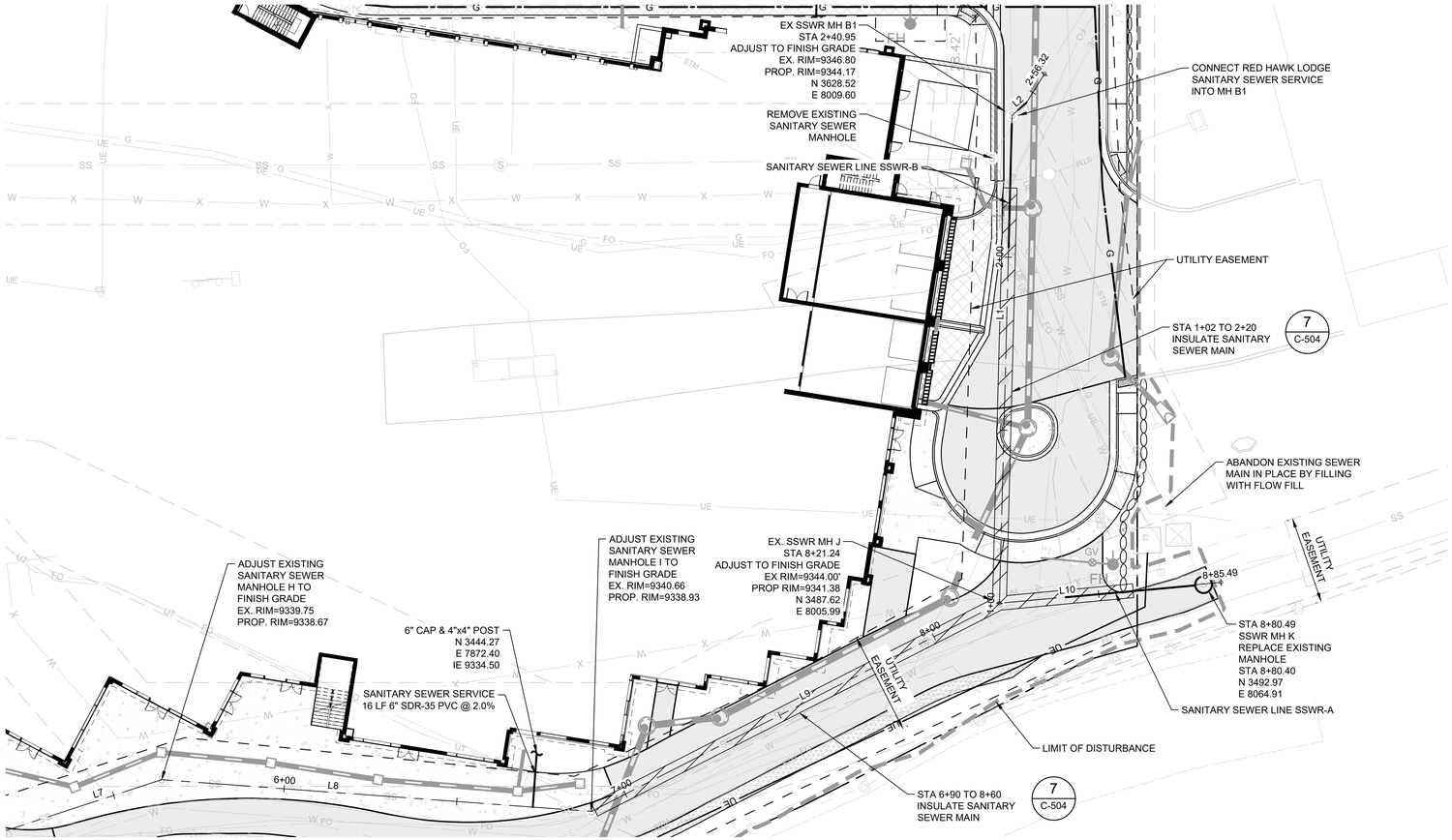


## PLAN VIEW

SCALE: 1"=20'

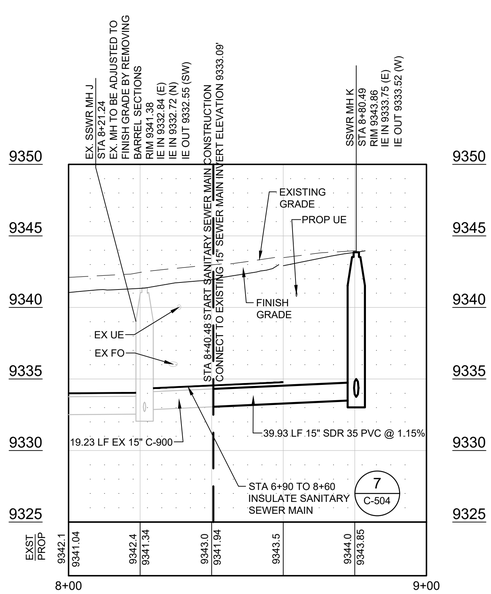


## PROFILE VIEW - SSWR-A

SCALE: VERT: 1"=20' HORIZ: 1"=5'

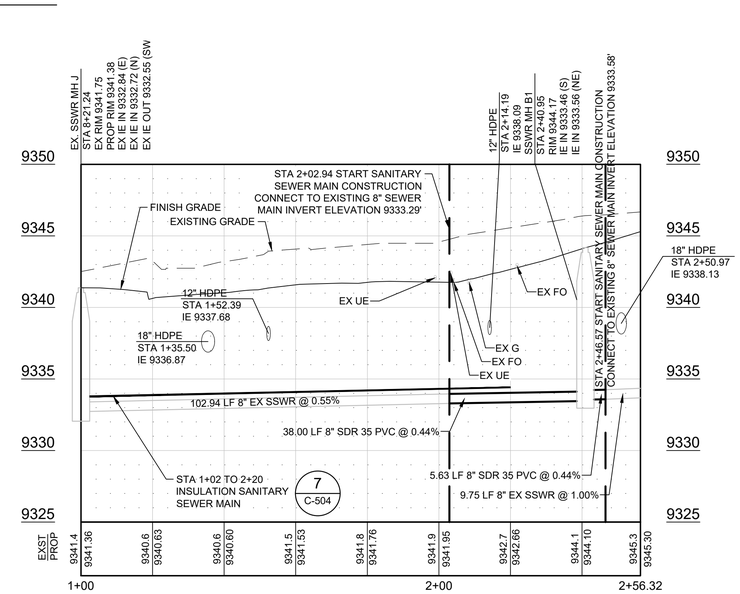


## PROFILE VIEW - SSWR-B

SCALE: VERT: 1"=20' HORIZ: 1"=5'

NOTES:

1. SEE SHEET C-504 FOR ALL SANITARY SEWER DETAILS.
2. CONTRACTOR TO FIELD VERIFY LOCATION AND ELEVATION OF EXISTING SANITARY SEWER PRIOR TO CONSTRUCTION.
3. EXISTING SSWR MH B1 EXISTING INVERT OUT SHALL BE PLUGGED AND NEW CHANNEL AND SHELF CONSTRUCTION TO MATCH NEW PIPE CONNECTIONS.

SSWR-A CENTERLINE ALIGNMENT TABLE

| NUMBER | LENGTH | RADIUS | LINE/CHORD DIRECTION | START NORTHING & EASTING | END NORTHING & EASTING |
|---|---|---|---|---|---|
| L7 | 65.04' | | N71° 53' 16.93"E | N: 3416.436<br>E: 7702.272 | N: 3436.657<br>E: 7764.092 |
| L8 | 124.41' | | S85° 46' 28.34"E | N: 3436.657<br>E: 7764.092 | N: 3427.490<br>E: 7888.169 |
| L9 | 132.28' | | N62° 57' 45.80"E | N: 3427.490<br>E: 7888.169 | N: 3487.619<br>E: 8005.990 |
| L10 | 64.24' | | N84° 36' 43.89"E | N: 3487.619<br>E: 8005.990 | N: 3493.651<br>E: 8069.948 |

SSWR-B CENTERLINE ALIGNMENT TABLE

| NUMBER | LENGTH | RADIUS | LINE/CHORD DIRECTION | START NORTHING & EASTING | END NORTHING & EASTING |
|---|---|---|---|---|---|
| L1 | 140.95' | | N1° 28' 11.03"E | N: 3487.619<br>E: 8005.990 | N: 3628.519<br>E: 8009.605 |
| L2 | 5.63' | | N48° 28' 39.80"E | N: 3628.519<br>E: 8009.605 | N: 3632.248<br>E: 8013.816 |

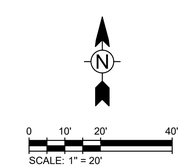


OZ ARCHITECTURE
3003 Larimer Street
Denver, Colorado 80205
phone 303.861.5704
www.ozarch.com

TETRA TECH
www.tetratech.com
130 SKI HILL ROAD SUITE 140
BRECKENRIDGE, COLORADO 80424
PHONE: (970)453-6394

# ONE RIVER RUN
75 HUNKI DORI CT.
KEYSTONE, CO 80435

PROJ. NO. 23526-20001
DRAWN: KGS
CHECKED: CDD
APPROVED: CDD
DATE: 2020/06/25

© OZ ARCHITECTURE

ONE RIVER RUN

ISSUED FOR:
ISSUE FOR PERMIT/ ISSUE FOR CONSTRUCTION

SHEET TITLE:
SANITARY SEWER A & B PLAN & PROFILE

SCALE: 1" = 20'
SHEET NUMBER
C-206

6/19/2020 2:03:02 PM - O:\PROJECTS\BRECKENRIDGE\23526\200-23526-20001\CAD\SHEETFILES\C-206 SANITARY SEWER A & B PLAN & PROFILE.DWG - PEOPLES, CHARLEY

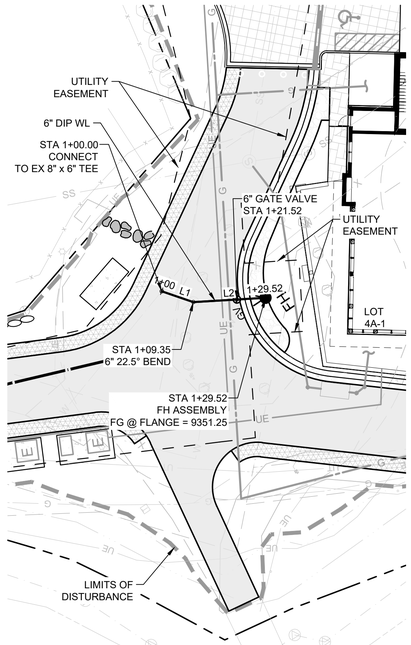


PLAN VIEW - WATER LINE 1

SCALE: 1"=20'

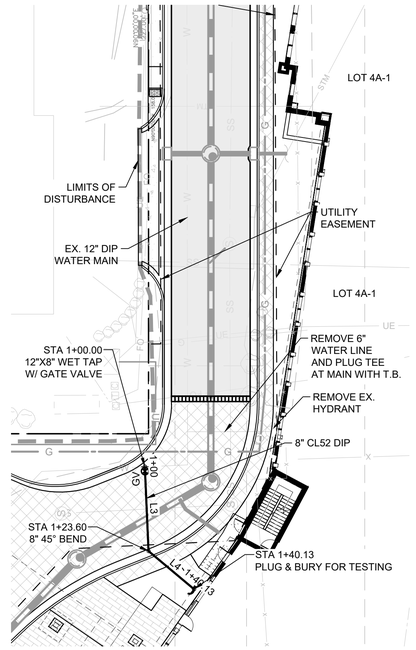


PLAN VIEW - WATER LINE 2

SCALE: 1"=20'

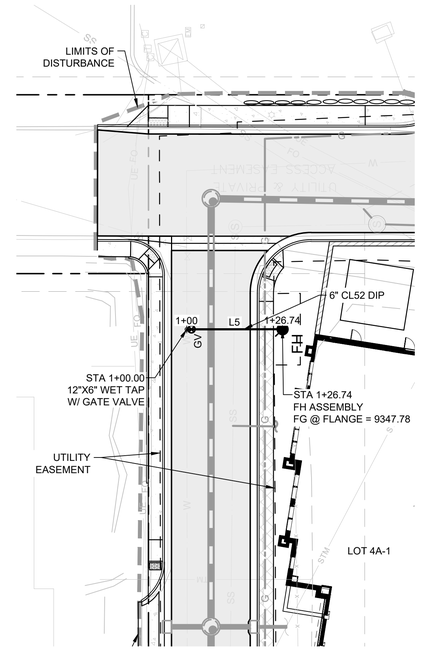


PLAN VIEW - WATER LINE 3

SCALE: 1"=20'

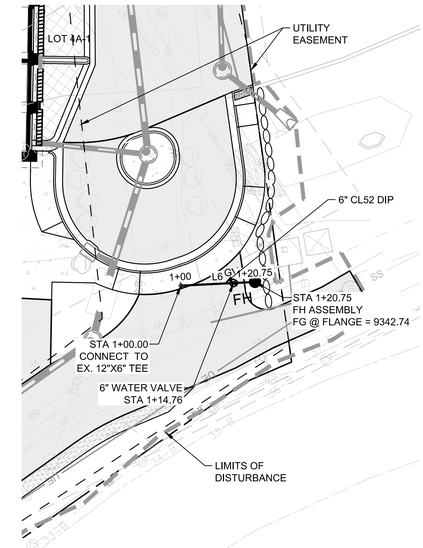


PLAN VIEW - WATER LINE 4

SCALE: 1"=20'

NOTES:
1. SEE SHEET C-503 FOR ALL WATER DETAILS.
2. CONTRACTOR TO FIELD VERIFY LOCATIONS AND ELEVATIONS AT EXISTING WATER LINES PRIOR TO CONSTRUCTION.
3. ALL TEES, HYDRANTS AND OTHER FITTINGS REQUIRE THRUST BLOCKS AND JOINT RESTRAINTS PER THE DETAILS ON SHEET C-503.

| WATER LINE 1 | | | | | |
|---|---|---|---|---|---|
| NUMBER | LENGTH | RADIUS | LINE/CHORD DIRECTION | START NORTHING & EASTING | END NORTHING & EASTING |
| L1 | 9.35' | | S52° 41' 29.11"W | N: 3838.69 E: 7693.39 | N: 3833.03 E: 7685.95 |
| L2 | 20.17' | | S30° 11' 29.11"W | N: 3833.03 E: 7685.95 | N: 3815.59 E: 7675.81 |

| WATER LINE 2 | | | | | |
|---|---|---|---|---|---|
| NUMBER | LENGTH | RADIUS | LINE/CHORD DIRECTION | START NORTHING & EASTING | END NORTHING & EASTING |
| L3 | 23.60' | | S87° 26' 05.58"W | N: 3693.43 E: 7809.55 | N: 3692.37 E: 7785.98 |
| L4 | 16.54' | | S39° 57' 32.48"W | N: 3692.37 E: 7785.98 | N: 3679.70 E: 7775.36 |

| WATER LINE 3 | | | | | |
|---|---|---|---|---|---|
| NUMBER | LENGTH | RADIUS | LINE/CHORD DIRECTION | START NORTHING & EASTING | END NORTHING & EASTING |
| L5 | 26.74' | | S0° 05' 35.73"E | N: 3681.72 E: 7980.21 | N: 3654.98 E: 7980.26 |

| WATER LINE 4 | | | | | |
|---|---|---|---|---|---|
| NUMBER | LENGTH | RADIUS | LINE/CHORD DIRECTION | START NORTHING & EASTING | END NORTHING & EASTING |
| L6 | 20.75' | | S84° 49' 38.56"E | N: 3500.69 E: 8018.09 | N: 3498.82 E: 8038.75 |

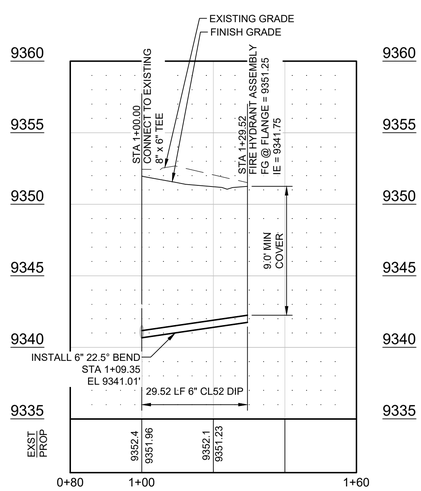


PROFILE VIEW - WATER LINE 1

SCALE: VERT: 1"=20' HORIZ: 1"=5'

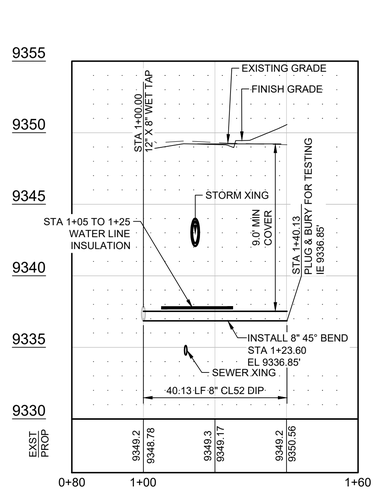


PROFILE VIEW - WATER LINE 2

SCALE: VERT: 1"=20' HORIZ: 1"=5'

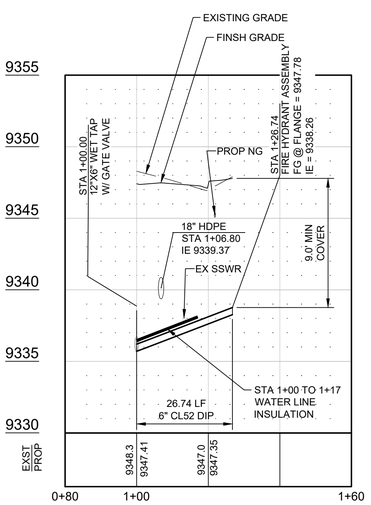


PROFILE VIEW - WATER LINE 3

SCALE: VERT: 1"=20' HORIZ: 1"=5'

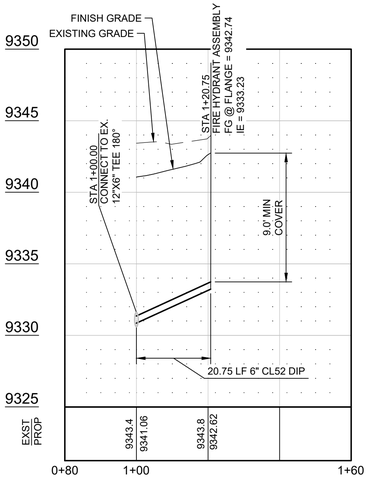


PROFILE VIEW - WATER LINE 4

SCALE: VERT: 1"=20' HORIZ: 1"=5'

0 10' 20' 40'
SCALE: 1" = 20'


OZ ARCHITECTURE
3003 Larimer Street
Denver, Colorado 80205
phone 303.861.5704
www.ozarch.com

TETRA TECH
www.tetratech.com
130 SKI HILL ROAD SUITE 140
BRECKENRIDGE, COLORADO 80424
PHONE: (970)453-6394


# ONE RIVER RUN
75 HUNKI DORI CT.
KEYSTONE, CO 80435

PROJ. NO. 23526-20001
DRAWN: KGS
CHECKED: CDD
APPROVED: CDD
DATE: 2020/06/25

© OZ ARCHITECTURE

ONE RIVER RUN

ISSUED FOR:
ISSUE FOR PERMIT/ ISSUE FOR CONSTRUCTION

SHEET TITLE:
WATER PLAN & PROFILE

SCALE: 1" = 30'
SHEET NUMBER
C-210

6/19/2020 2:04:17 PM - O:\PROJECTS\BRECKENRIDGE\23526\200-23526-20001\CAD\SHEETFILES\C-210 WATER PLAN & PROFILE.DWG - PEOPLES, CHARLEY

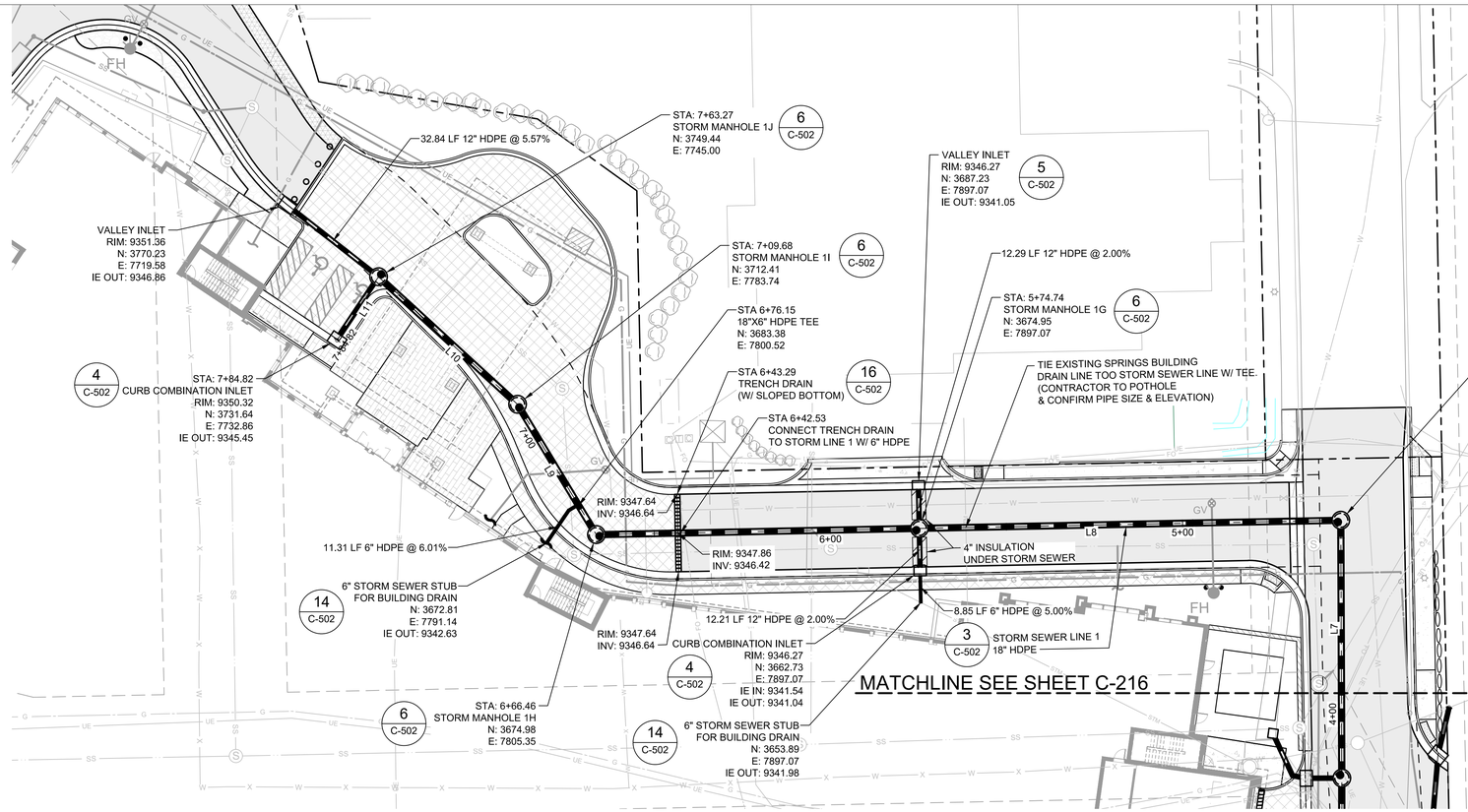


## PLAN VIEW STORM SEWER LINE 1

SCALE: 1" = 20'

| STORM SEWER LINE 1 ALIGNMENT LAYOUT TABLE | | | | | |
|---|---|---|---|---|---|
| NUMBER | LENGTH | RADIUS | LINE/CHORD DIRECTION | START NORTHING & EASTING | END NORTHING & EASTING |
| L7 | 87.73' | | N0° 54' 16.21"E | N: 3587.177<br>E: 8015.367 | N: 3674.895<br>E: 8016.752 |
| L8 | 211.40' | | N89° 58' 32.27"W | N: 3674.895<br>E: 8016.752 | N: 3674.984<br>E: 7805.354 |
| L9 | 43.22' | | N29° 59' 57.91"W | N: 3674.984<br>E: 7805.354 | N: 3712.414<br>E: 7783.745 |
| L10 | 53.59' | | N46° 17' 54.11"W | N: 3712.414<br>E: 7783.745 | N: 3749.440<br>E: 7745.001 |
| L11 | 21.54' | | S34° 17' 59.96"W | N: 3749.440<br>E: 7745.001 | N: 3731.643<br>E: 7732.861 |

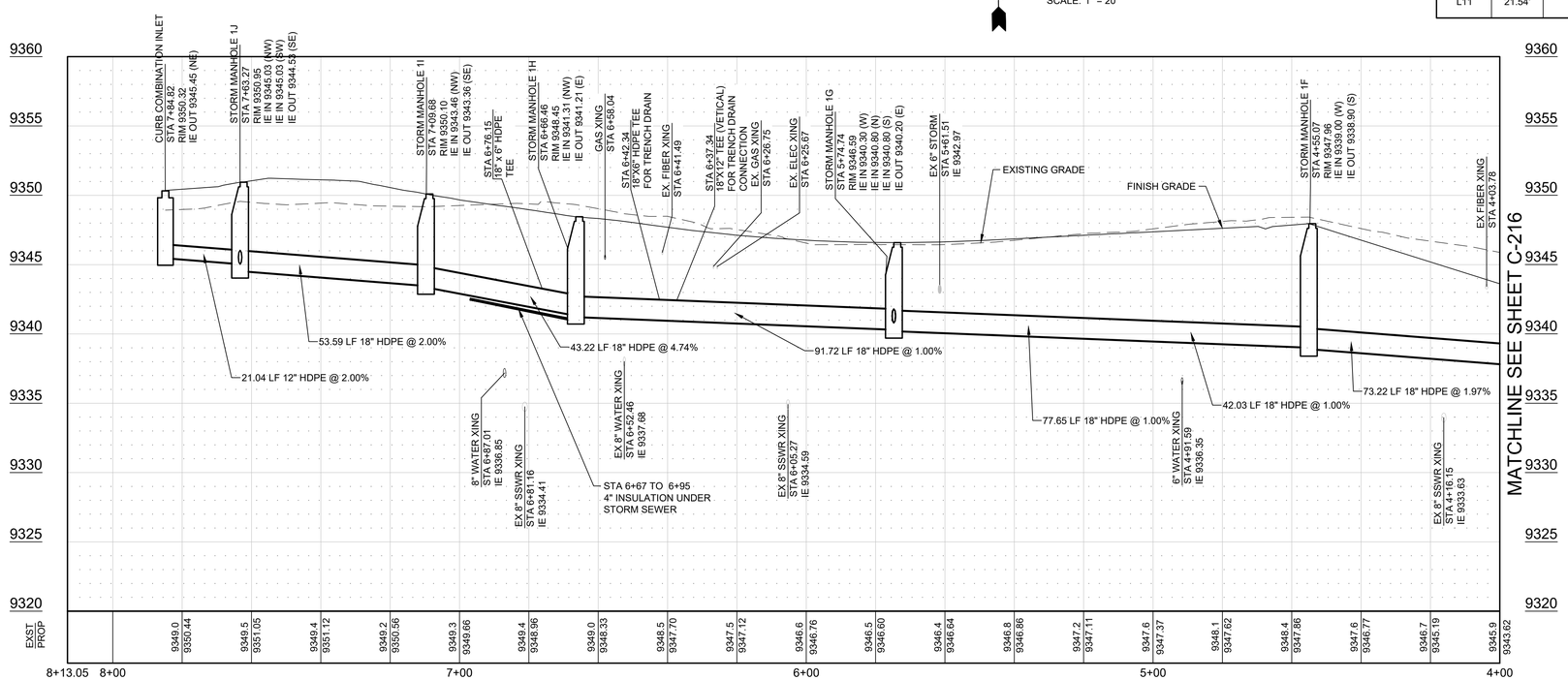


## PROFILE STORM SEWER LINE 1

SCALE: HORIZ: 1"= 20' VERT: 1"= 5'


OZ ARCHITECTURE
3003 Larimer Street
Denver, Colorado 80205
phone 303.861.5704
www.ozarch.com

TETRA TECH
www.tetratech.com
130 SKI HILL ROAD SUITE 140
BRECKENRIDGE, COLORADO 80424
PHONE: (970)453-6394


# ONE RIVER RUN
75 HUNKI DORI CT.
KEYSTONE, CO 80435

PROJ. NO. 23526-20001
DRAWN: KGS
CHECKED: CDD
APPROVED: CDD
DATE: 2020/06/25

© OZ ARCHITECTURE

ONE RIVER RUN

ISSUED FOR:
ISSUE FOR PERMIT/ ISSUE FOR CONSTRUCTION

SHEET TITLE:
STORM SEWER
PLAN & PROFILE

SCALE: 1" = 20'
SHEET NUMBER
C-215

6/19/2020 2:05:46 PM - O:\PROJECTS\BRECKENRIDGE\23526\200-23526-20001\CAD\SHEETFILES\C201 STORM SEWER PLAN AND PROFILE.DWG - PEOPLES, CHARLEY

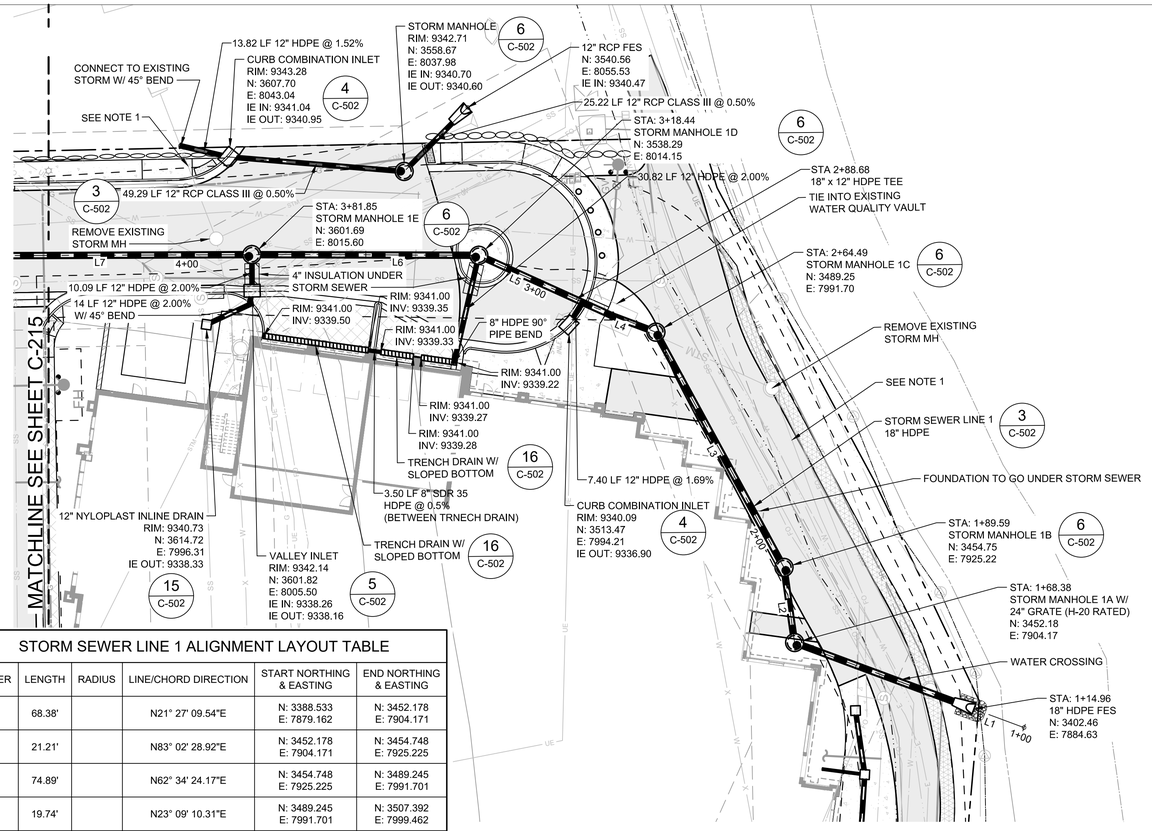


PLAN VIEW STORM SEWER LINE 1

SCALE: 1" = 20'

| STORM SEWER LINE 1 ALIGNMENT LAYOUT TABLE | | | | | |
|---|---|---|---|---|---|
| NUMBER | LENGTH | RADIUS | LINE/CHORD DIRECTION | START NORTHING & EASTING | END NORTHING & EASTING |
| L1 | 68.38' | | N21° 27' 09.54"E | N: 3388.533 E: 7879.162 | N: 3452.178 E: 7904.171 |
| L2 | 21.21' | | N83° 02' 28.92"E | N: 3452.178 E: 7904.171 | N: 3454.748 E: 7925.225 |
| L3 | 74.89' | | N62° 34' 24.17"E | N: 3454.748 E: 7925.225 | N: 3489.245 E: 7991.701 |
| L4 | 19.74' | | N23° 09' 10.31"E | N: 3489.245 E: 7991.701 | N: 3507.392 E: 7999.462 |
| L5 | 34.21' | | N25° 25' 29.09"E | N: 3507.392 E: 7999.462 | N: 3538.293 E: 8014.151 |
| L6 | 48.90' | | N1° 25' 31.68"E | N: 3538.293 E: 8014.151 | N: 3587.177 E: 8015.367 |
| L7 | 87.73' | | N0° 54' 16.21"E | N: 3587.177 E: 8015.367 | N: 3674.895 E: 8016.752 |

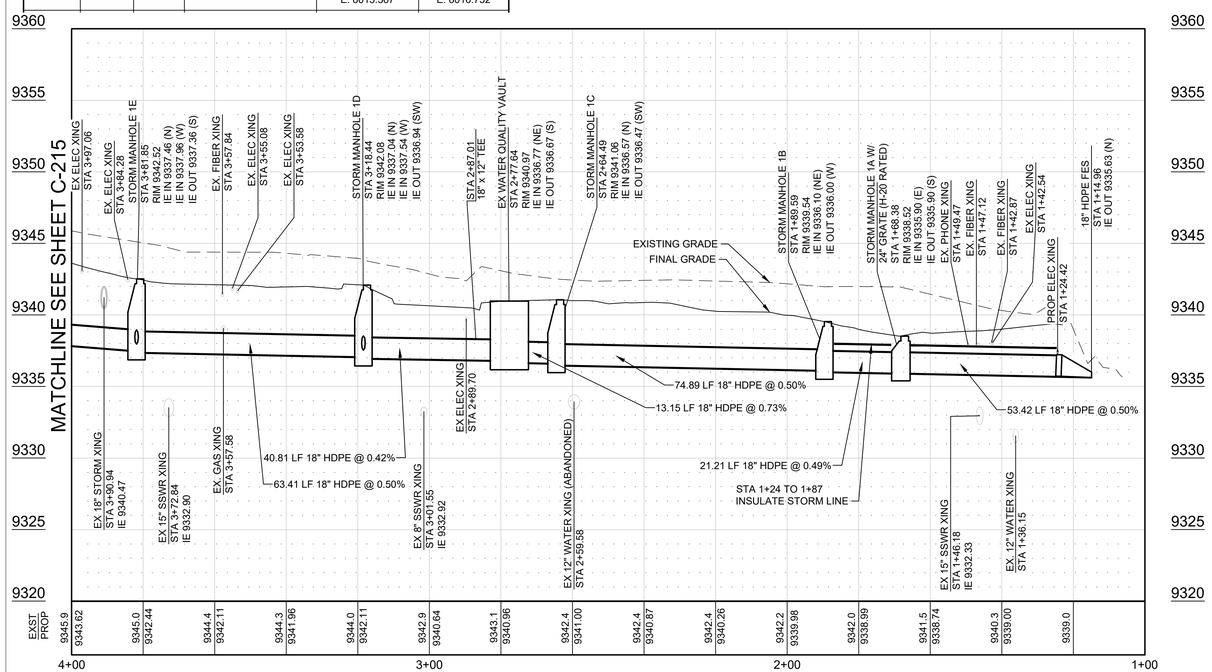


PROFILE STORM SEWER LINE 1

SCALE: HORIZ: 1"= 20' VERT: 1"= 5'

NOTES:
1. ABANDON EXISTING STORM SEWER IN PLACE BY FILLING EXISTING PIPE WITH FLOW FILL.

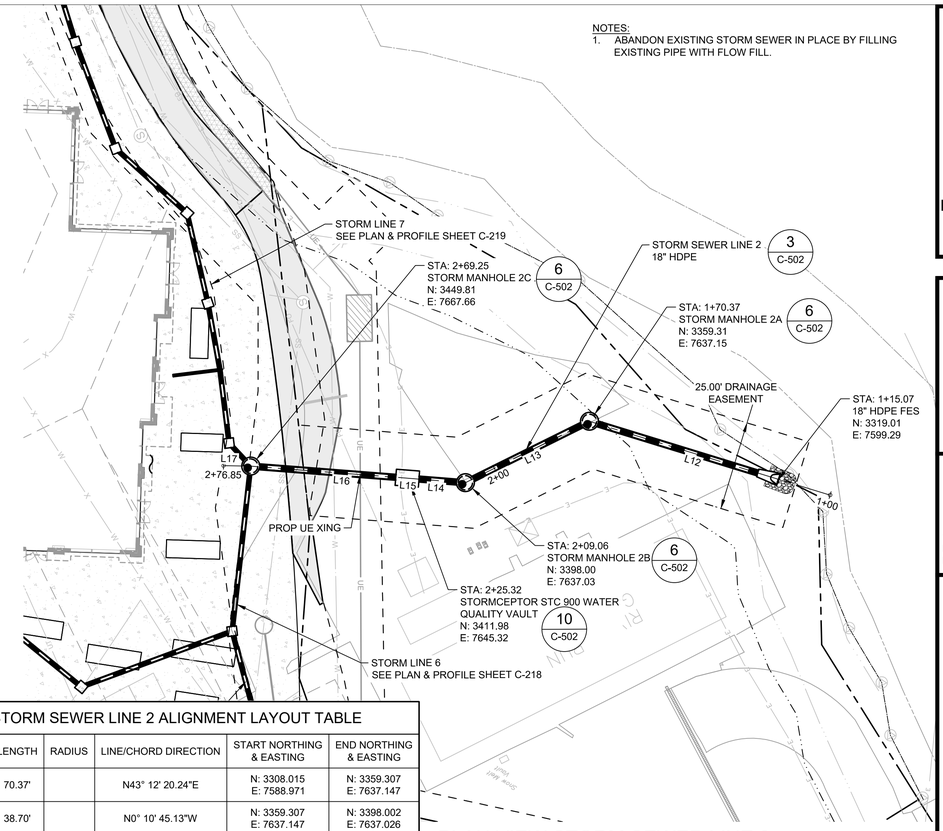


PLAN VIEW STORM SEWER LINE 2

SCALE: 1" = 20'

| STORM SEWER LINE 2 ALIGNMENT LAYOUT TABLE | | | | | |
|---|---|---|---|---|---|
| NUMBER | LENGTH | RADIUS | LINE/CHORD DIRECTION | START NORTHING & EASTING | END NORTHING & EASTING |
| L12 | 70.37' | | N43° 12' 20.24"E | N: 3308.015 E: 7588.971 | N: 3359.307 E: 7637.147 |
| L13 | 38.70' | | N0° 10' 45.13"W | N: 3359.307 E: 7637.147 | N: 3398.002 E: 7637.026 |
| L14 | 13.01' | | N30° 42' 15.75"E | N: 3398.002 E: 7637.026 | N: 3409.184 E: 7643.667 |
| L15 | 6.50' | | N30° 35' 35.27"E | N: 3409.184 E: 7643.667 | N: 3414.780 E: 7646.975 |
| L16 | 40.68' | | N30° 33' 27.23"E | N: 3414.780 E: 7646.975 | N: 3449.812 E: 7667.658 |
| L17 | 7.60' | | N27° 17' 30.42"E | N: 3449.812 E: 7667.658 | N: 3456.562 E: 7671.141 |

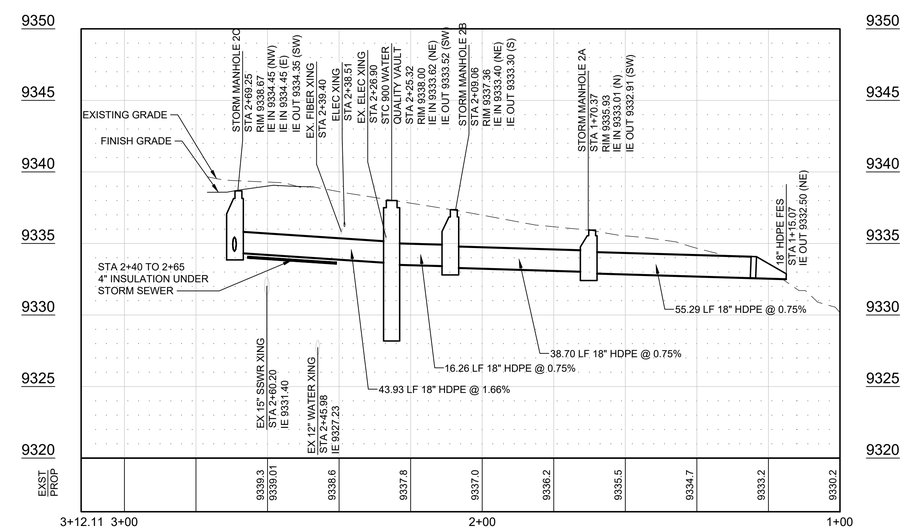


PROFILE STORM SEWER LINE 2

SCALE: HORIZ: 1"= 20' VERT: 1"= 5'


OZ ARCHITECTURE
3003 Larimer Street
Denver, Colorado 80205
phone 303.861.5704
www.ozarch.com

TETRA TECH
www.tetratech.com
130 SKI HILL ROAD SUITE 140
BRECKENRIDGE, COLORADO 80424
PHONE: (970)453-6394


# ONE RIVER RUN
75 HUNKI DORI CT.
KEYSTONE, CO 80435

PROJ. NO. 23526-20001
DRAWN: KGS
CHECKED: CDD
APPROVED: CDD
DATE: 2020/06/25

© OZ ARCHITECTURE

ONE RIVER RUN

ISSUED FOR:
ISSUE FOR PERMIT/ ISSUE FOR CONSTRUCTION

SHEET TITLE:
STORM SEWER PLAN & PROFILE

SCALE: 1" = 20'
SHEET NUMBER
C-216

6/19/2020 2:06:19 PM - O:\PROJECTS\BRECKENRIDGE\23526\200-23526-20001\CAD\SHEETFILES\C201 STORM SEWER PLAN AND PROFILE.DWG - PEOPLES, CHARLEY

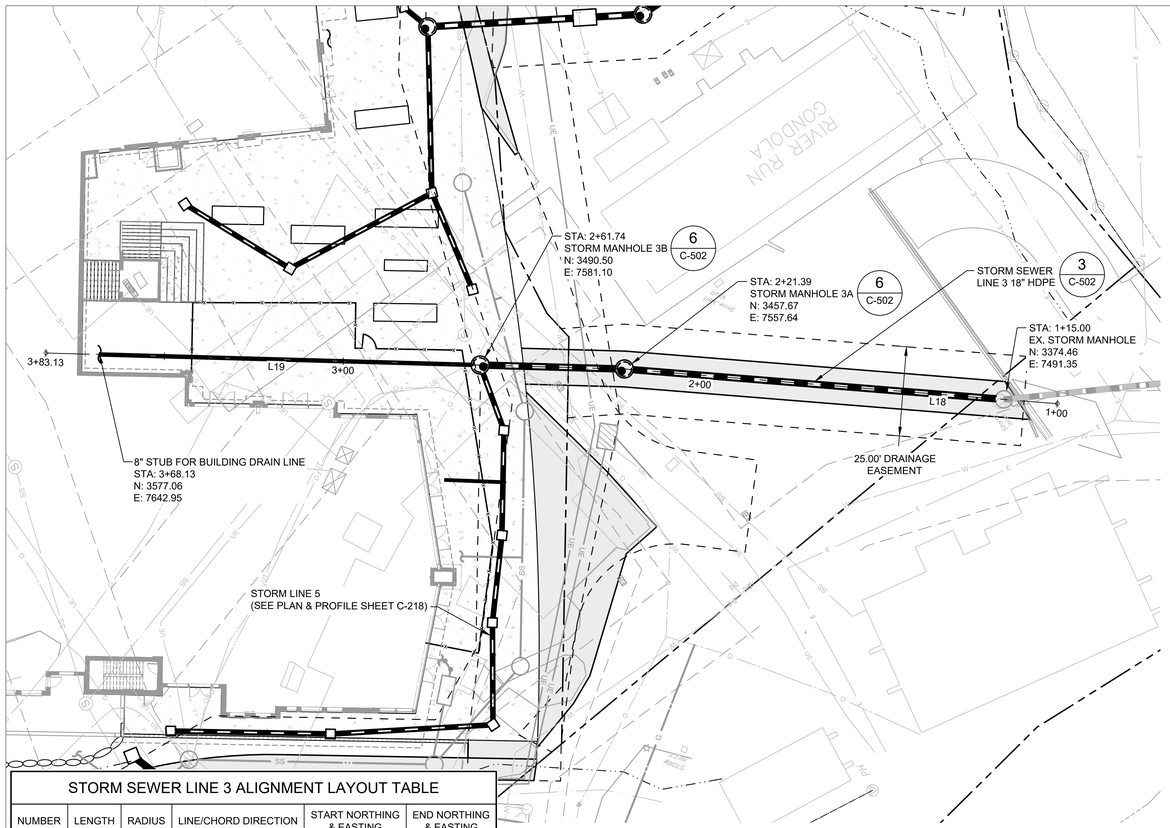


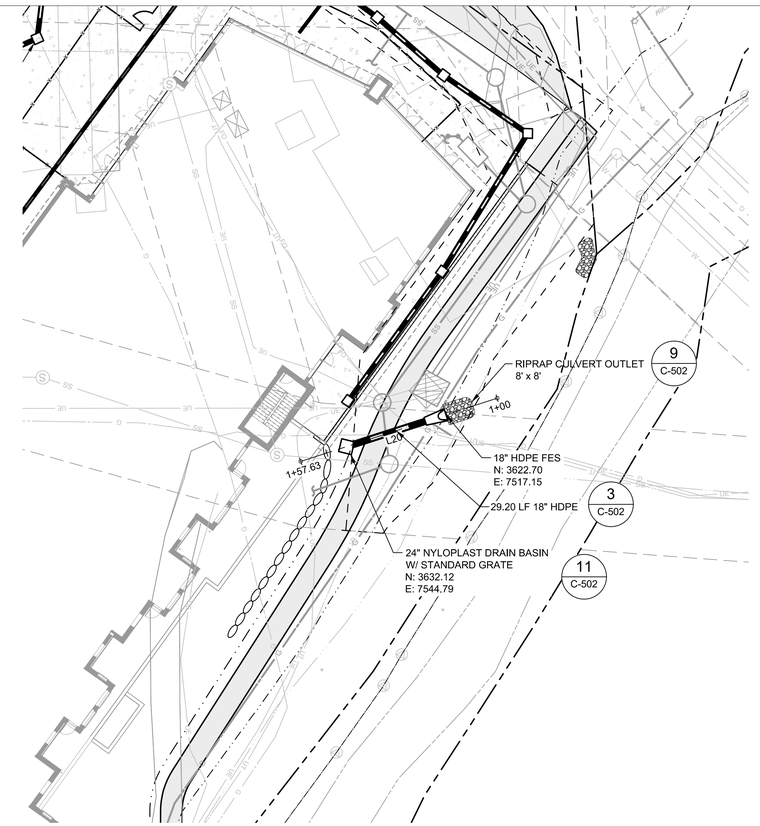


| STORM SEWER LINE 3 ALIGNMENT LAYOUT TABLE | | | | | |
|---|---|---|---|---|---|
| NUMBER | LENGTH | RADIUS | LINE/CHORD DIRECTION | START NORTHING & EASTING | END NORTHING & EASTING |
| L18 | 121.39' | | N38° 32' 28.44"E | N: 3362.724<br>E: 7482.005 | N: 3457.670<br>E: 7557.640 |
| L19 | 161.74' | | N35° 32' 55.67"E | N: 3457.670<br>E: 7557.640 | N: 3589.265<br>E: 7651.675 |

PLAN VIEW STORM SEWER LINE 3

SCALE: 1" = 20'

| STORM SEWER LINE 4 ALIGNMENT LAYOUT TABLE | | | | | |
|---|---|---|---|---|---|
| NUMBER | LENGTH | RADIUS | LINE/CHORD DIRECTION | START NORTHING & EASTING | END NORTHING & EASTING |
| L20 | 57.63' | | N71° 11' 06.52"E | N: 3617.862<br>E: 7502.956 | N: 3636.447<br>E: 7557.503 |

PLAN VIEW STORM SEWER LINE 4

SCALE: 1" = 20'

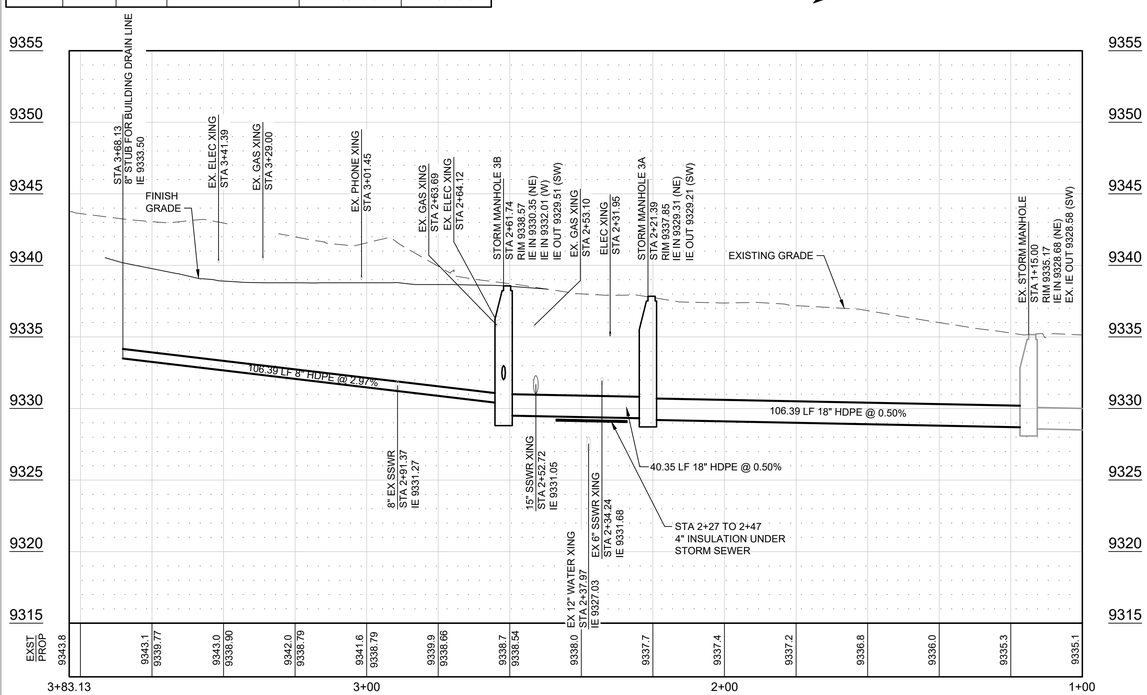


PROFILE STORM SEWER LINE 3

SCALE: HORIZ: 1"= 20' VERT: 1"= 5'

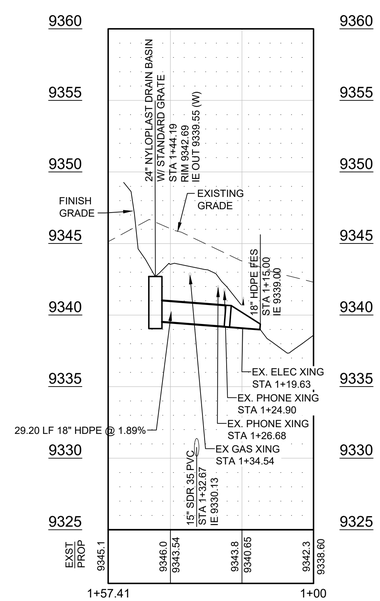


PROFILE STORM SEWER LINE 4

SCALE: HORIZ: 1"= 20' VERT: 1"= 5'


OZ ARCHITECTURE

3003 Larimer Street
Denver, Colorado 80205
phone 303.861.5704
www.ozarch.com

TETRA TECH
www.tetratech.com
130 SKI HILL ROAD SUITE 140
BRECKENRIDGE, COLORADO 80424
PHONE: (970)453-6394


# ONE RIVER RUN

75 HUNKI DORI CT.
KEYSTONE, CO 80435

PROJ. NO. 23526-20001
DRAWN: KGS
CHECKED: CDD
APPROVED: CDD
DATE: 2020/06/25

© OZ ARCHITECTURE

ONE RIVER RUN

ISSUED FOR:
ISSUE FOR PERMIT/ ISSUE FOR CONSTRUCTION

SHEET TITLE:
STORM SEWER
PLAN & PROFILE

SCALE: 1" = 20'
SHEET NUMBER

C-217

6/19/2020 2:06:46 PM - O:\PROJECTS\BRECKENRIDGE\23526\200-23526-20001\CAD\SHEETFILES\C201 STORM SEWER PLAN AND PROFILE.DWG - PEOPLES, CHARLEY

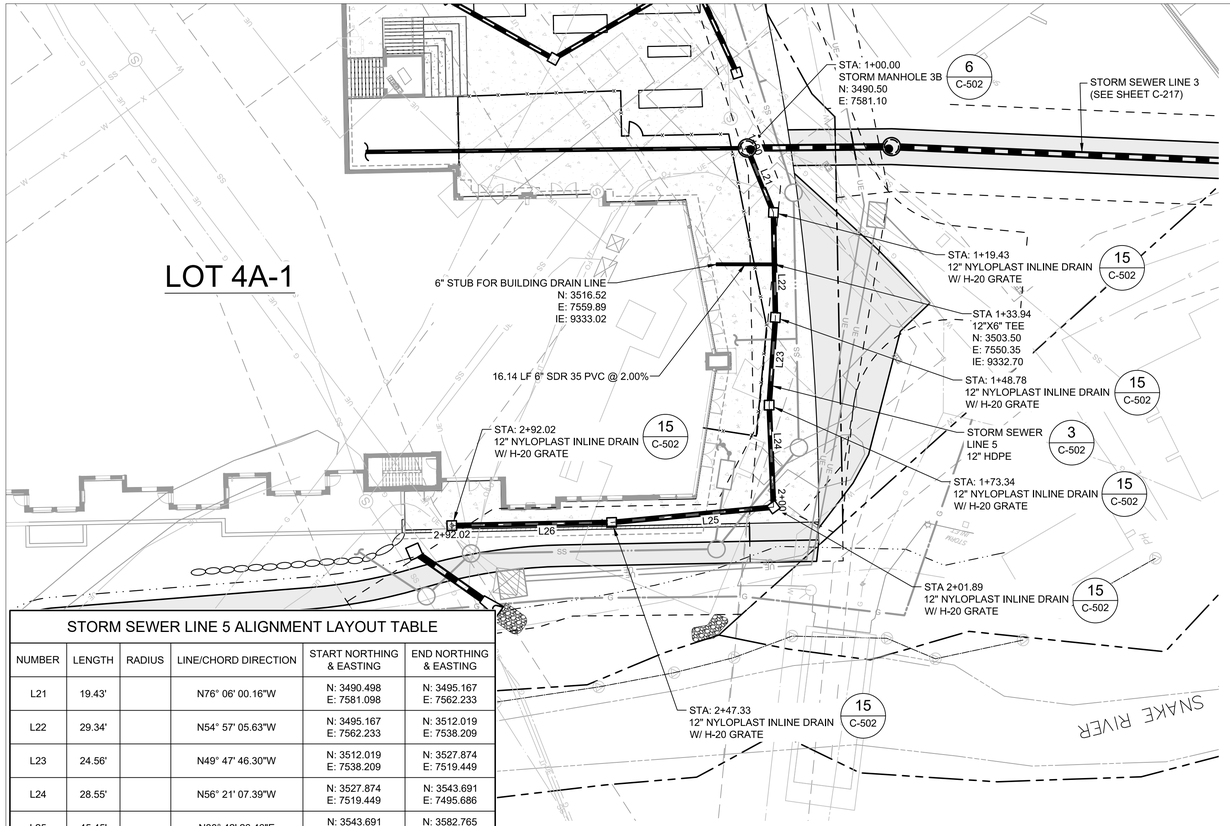


| STORM SEWER LINE 5 ALIGNMENT LAYOUT TABLE | | | | | |
|---|---|---|---|---|---|
| NUMBER | LENGTH | RADIUS | LINE/CHORD DIRECTION | START NORTHING & EASTING | END NORTHING & EASTING |
| L21 | 19.43' | | N76° 06' 00.16"W | N: 3490.498<br>E: 7581.098 | N: 3495.167<br>E: 7562.233 |
| L22 | 29.34' | | N54° 57' 05.63"W | N: 3495.167<br>E: 7562.233 | N: 3512.019<br>E: 7538.209 |
| L23 | 24.56' | | N49° 47' 46.30"W | N: 3512.019<br>E: 7538.209 | N: 3527.874<br>E: 7519.449 |
| L24 | 28.55' | | N56° 21' 07.39"W | N: 3527.874<br>E: 7519.449 | N: 3543.691<br>E: 7495.686 |
| L25 | 45.45' | | N30° 42' 26.46"E | N: 3543.691<br>E: 7495.686 | N: 3582.765<br>E: 7518.894 |
| L26 | 44.69' | | N35° 00' 00.00"E | N: 3582.765<br>E: 7518.894 | N: 3619.370<br>E: 7544.524 |

## PLAN VIEW STORM SEWER LINE 5

0 10' 20' 40'
SCALE: 1" = 20'

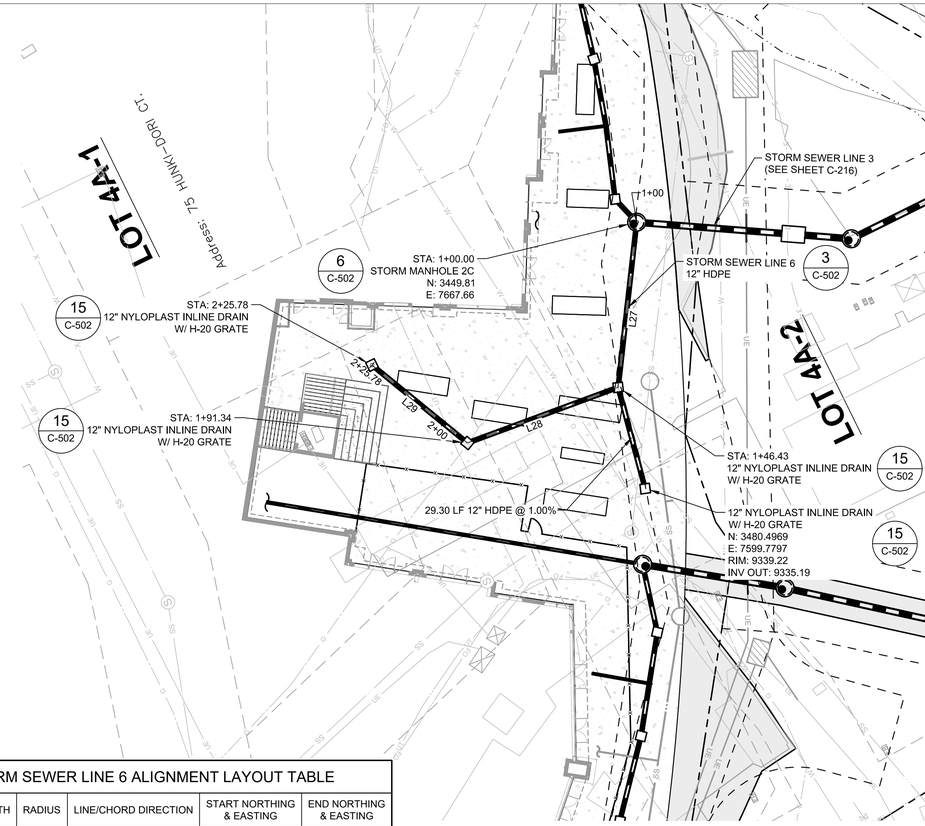


| STORM SEWER LINE 6 ALIGNMENT LAYOUT TABLE | | | | | |
|---|---|---|---|---|---|
| NUMBER | LENGTH | RADIUS | LINE/CHORD DIRECTION | START NORTHING & EASTING | END NORTHING & EASTING |
| L27 | 46.43' | | N57° 26' 43.54"W | N: 3449.812<br>E: 7667.658 | N: 3474.795<br>E: 7628.523 |
| L28 | 44.91' | | N5° 53' 16.83"E | N: 3474.795<br>E: 7628.523 | N: 3519.470<br>E: 7633.131 |
| L29 | 34.44' | | N65° 24' 22.26"E | N: 3519.470<br>E: 7633.131 | N: 3533.803<br>E: 7664.446 |

## PLAN VIEW STORM SEWER LINE 6

0 10' 20' 40'
SCALE: 1" = 20'

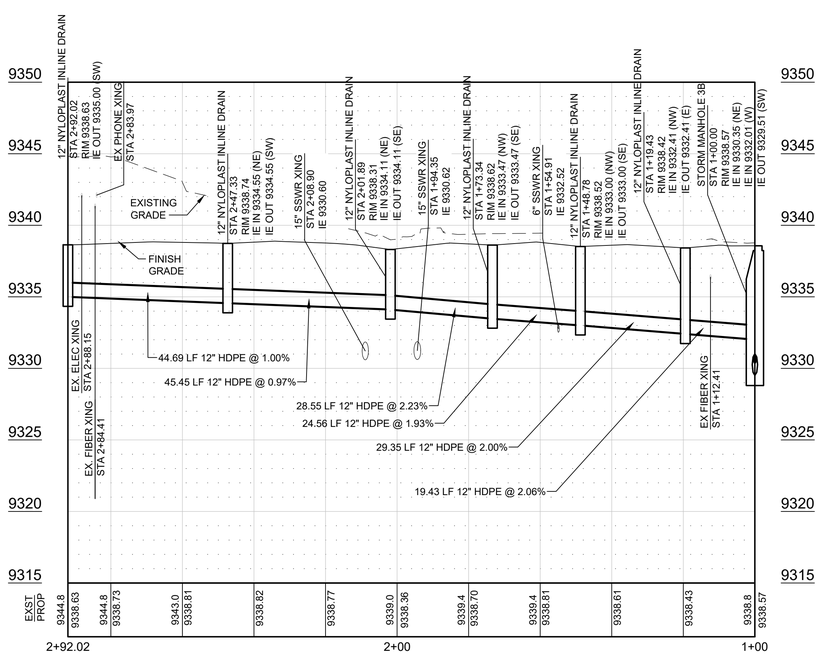


## PROFILE STORM SEWER LINE 5

SCALE: HORIZ: 1"= 20' VERT: 1"= 5'

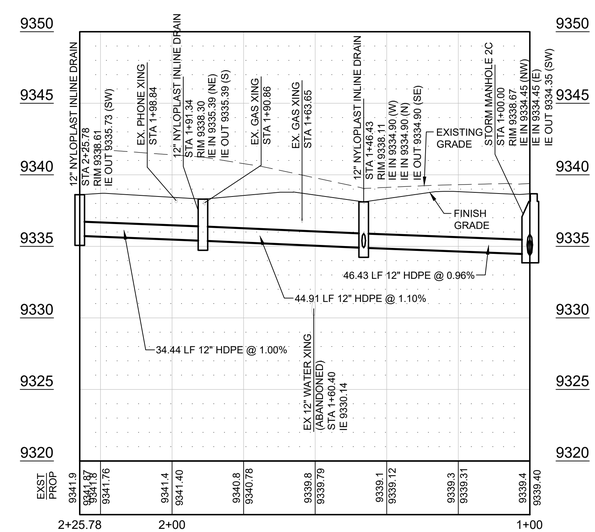


## PROFILE STORM SEWER LINE 6

SCALE: HORIZ: 1"= 20' VERT: 1"= 5'


OZ ARCHITECTURE
3003 Larimer Street
Denver, Colorado 80205
phone 303.861.5704
www.ozarch.com

TETRA TECH
www.tetratech.com
130 SKI HILL ROAD SUITE 140
BRECKENRIDGE, COLORADO 80424
PHONE: (970)453-6394


# ONE RIVER RUN
75 HUNKI DORI CT.
KEYSTONE, CO 80435

PROJ. NO. 23526-20001
DRAWN: KGS
CHECKED: CDD
APPROVED: CDD
DATE: 2020/06/25

© OZ ARCHITECTURE

ONE RIVER RUN

ISSUED FOR:
ISSUE FOR PERMIT/ ISSUE FOR CONSTRUCTION

SHEET TITLE:
STORM SEWER
PLAN & PROFILE

SCALE: 1" = 20'
SHEET NUMBER
C-218

6/19/2020 2:07:13 PM - O:\PROJECTS\BRECKENRIDGE\23526\200-23526-20001\CAD\SHEETFILES\C201 STORM SEWER PLAN AND PROFILE.DWG - PEOPLES, CHARLEY

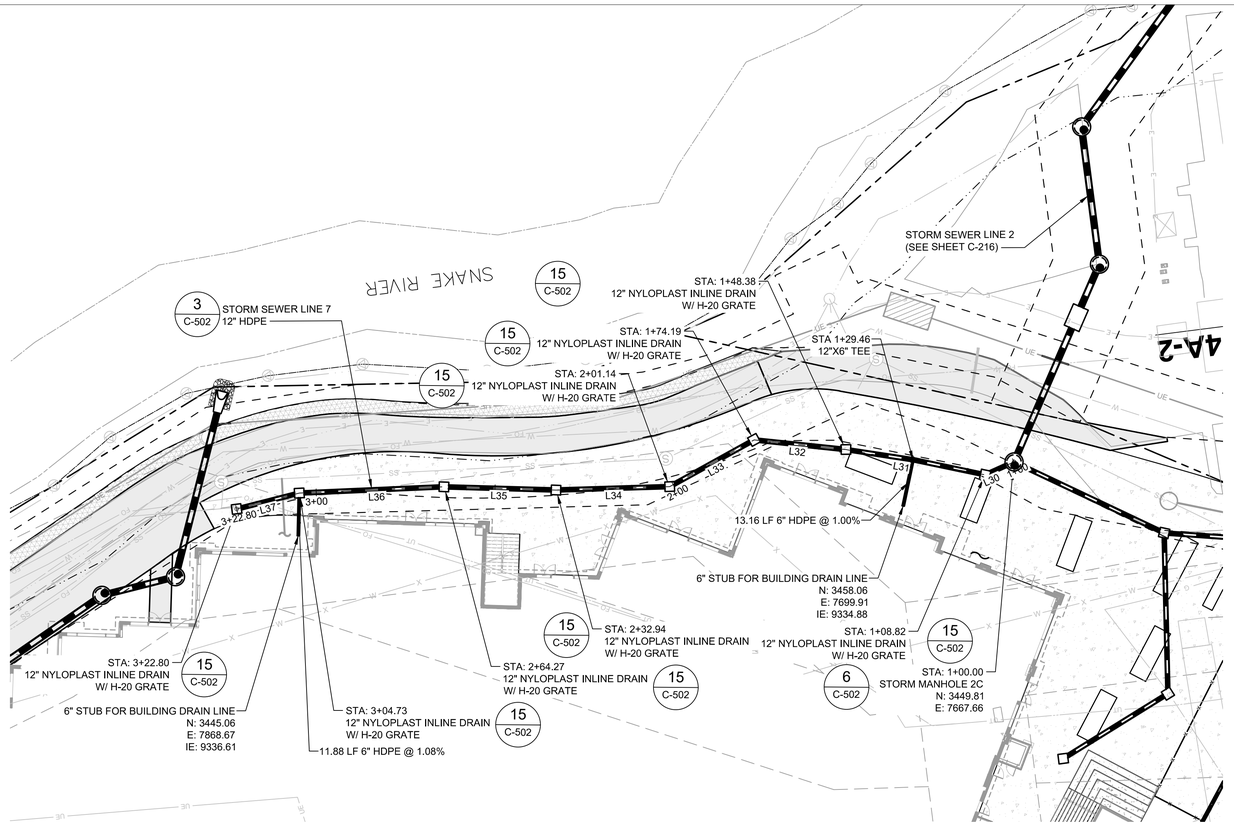


## PLAN VIEW STORM SEWER LINE 7

0 10' 20' 40'
SCALE: 1" = 20'

| STORM SEWER LINE 7 ALIGNMENT LAYOUT TABLE | | | | | |
|---|---|---|---|---|---|
| NUMBER | LENGTH | RADIUS | LINE/CHORD DIRECTION | START NORTHING & EASTING | END NORTHING & EASTING |
| L30 | 8.82' | | N73° 08' 33.16"E | N: 3449.812<br>E: 7667.658 | N: 3452.370<br>E: 7676.101 |
| L31 | 39.56' | | S72° 27' 54.70"E | N: 3452.370<br>E: 7676.101 | N: 3440.452<br>E: 7713.820 |
| L32 | 25.81' | | S76° 48' 08.50"E | N: 3440.452<br>E: 7713.820 | N: 3434.560<br>E: 7738.945 |
| L33 | 26.96' | | N68° 16' 34.62"E | N: 3434.560<br>E: 7738.945 | N: 3444.539<br>E: 7763.989 |
| L34 | 31.80' | | S84° 30' 30.55"E | N: 3444.539<br>E: 7763.989 | N: 3441.496<br>E: 7795.639 |
| L35 | 31.33' | | S81° 07' 32.82"E | N: 3441.496<br>E: 7795.639 | N: 3436.663<br>E: 7826.590 |
| L36 | 40.47' | | S85° 14' 45.10"E | N: 3436.663<br>E: 7826.590 | N: 3433.309<br>E: 7866.917 |
| L37 | 18.07' | | N82° 56' 25.80"E | N: 3433.309<br>E: 7866.917 | N: 3435.530<br>E: 7884.849 |

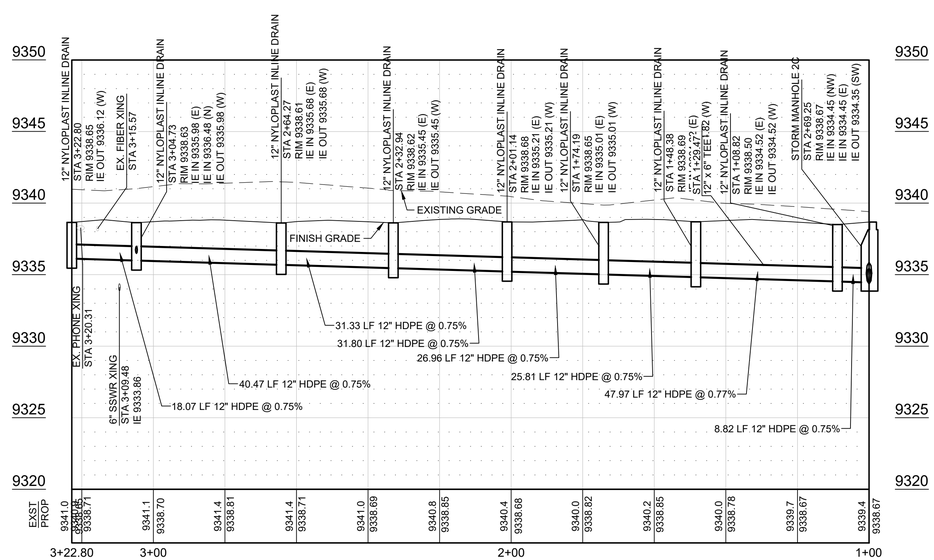


## PROFILE STORM SEWER LINE 7

SCALE: HORIZ: 1"= 20' VERT: 1"= 5'


OZ ARCHITECTURE
3003 Larimer Street
Denver, Colorado 80205
phone 303.861.5704
www.ozarch.com

TETRA TECH
www.tetratech.com
130 SKI HILL ROAD SUITE 140
BRECKENRIDGE, COLORADO 80424
PHONE: (970)453-6394


# ONE RIVER RUN
75 HUNKI DORI CT.
KEYSTONE, CO 80435

PROJ. NO. 23526-20001
DRAWN: KGS
CHECKED: CDD
APPROVED: CDD
DATE: 2020/06/25

© OZ ARCHITECTURE

ONE RIVER RUN

ISSUED FOR:
ISSUE FOR PERMIT/ ISSUE FOR CONSTRUCTION

SHEET TITLE:
STORM SEWER
PLAN & PROFILE

SCALE: 1" = 20'
SHEET NUMBER
C-219

6/19/2020 2:07:29 PM - O:\PROJECTS\BRECKENRIDGE\23526\200-23526-20001\CAD\SHEETFILES\C201 STORM SEWER PLAN AND PROFILE.DWG - PEOPLES, CHARLEY

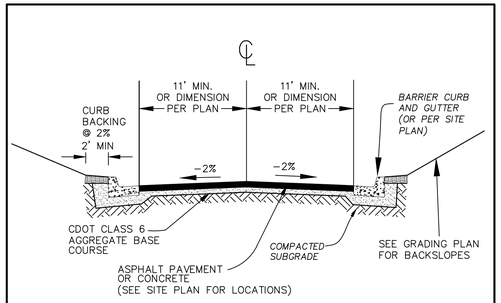


TYPICAL DRIVEWAY SECTION
NO SCALE
1 C501

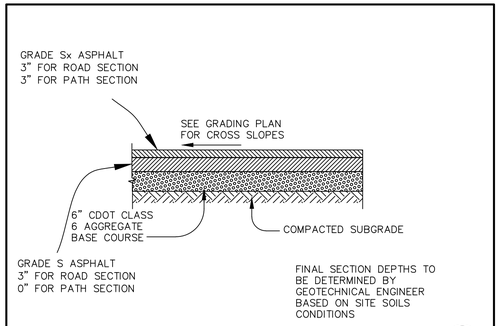


ASPHALT PAVEMENT SECTION
NO SCALE
2 C501

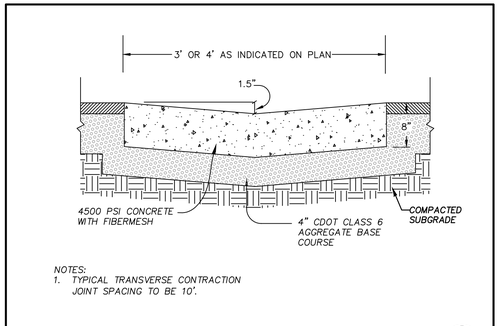


NOTES:
1. TYPICAL TRANSVERSE CONTRACTION JOINT SPACING TO BE 10'.

CONCRETE PAN DETAIL
NO SCALE
3 C501

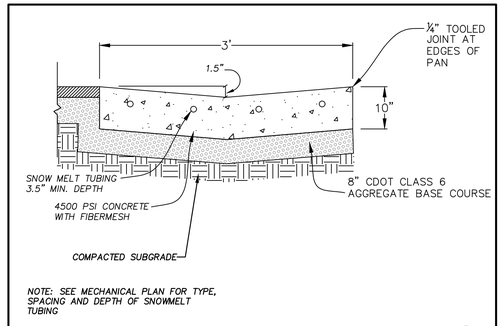


NOTE: SEE MECHANICAL PLAN FOR TYPE, SPACING AND DEPTH OF SNOWMELT TUBING

3' CONCRETE PAN W/ SNOW MELT DETAIL
NO SCALE
4 C501

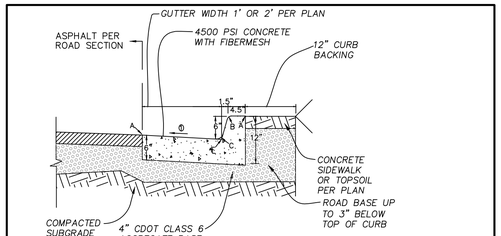


① - CATCH GUTTER - SLOPE UP 1" PER FT.
SPILL GUTTER - SLOPE DOWN 1/2" PER FT.

NOTE:
TYPICAL TRANSVERSE CONTRACTION JOINT SPACING TO BE 10'.

| LEGEND FOR RADII | |
|---|---|
| A | = 1/8" |
| B | = 1-1/2" |
| C | = 1-1/2"-- 2" |

BARRIER CURB AND GUTTER DETAIL
NO SCALE
5 C501

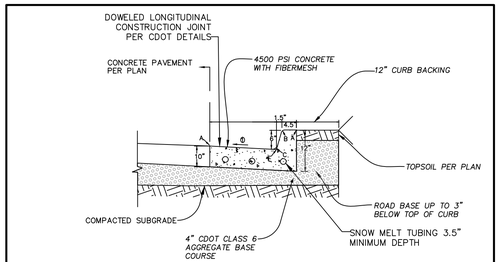


① - CATCH GUTTER - SLOPE UP 1" PER FT.
SPILL GUTTER - SLOPE DOWN 1/2" PER FT.

| LEGEND FOR RADII | |
|---|---|
| A | = 1/8" |
| B | = 1-1/2" |
| C | = 1-1/2"-- 2" |

NOTE: SEE MECHANICAL PLAN FOR TYPE, SPACING AND DEPTH OF SNOWMELT TUBING

BARRIER CURB AND GUTTER WITH SNOW MELT
NO SCALE
6 C501

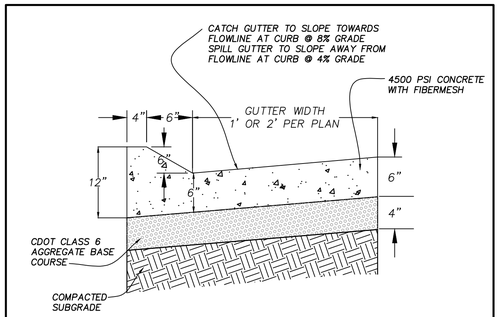


MOUNTABLE CURB & GUTTER
NO SCALE
7 C501

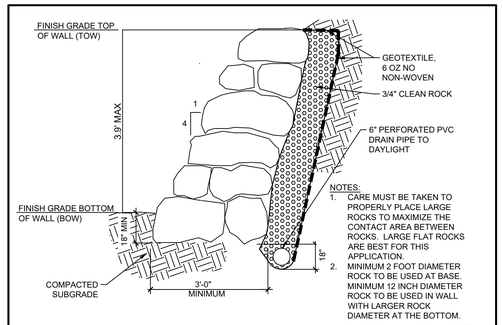


NOTES:
1. CARE MUST BE TAKEN TO PROPERLY PLACE LARGE ROCKS TO MAXIMIZE THE CONTACT AREA BETWEEN ROCKS. LARGE FLAT ROCKS ARE BEST FOR THIS APPLICATION.
2. MINIMUM 2 FOOT DIAMETER ROCK TO BE USED AT BASE. MINIMUM 12 INCH DIAMETER ROCK TO BE USED IN WALL WITH LARGER ROCK DIAMETER AT THE BOTTOM.

BOULDER WALL DETAIL
NO SCALE
8 C501

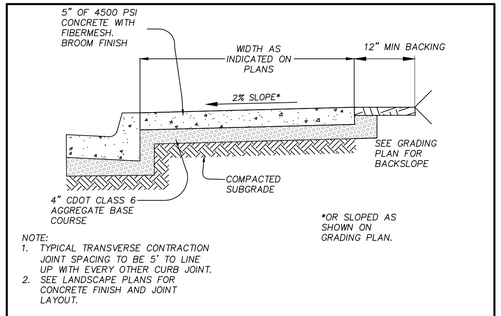


NOTE:
1. TYPICAL TRANSVERSE CONTRACTION JOINT SPACING TO BE 5' TO LINE UP WITH EVERY OTHER CURB JOINT.
2. SEE LANDSCAPE PLANS FOR CONCRETE FINISH AND JOINT LAYOUT.

CONCRETE SIDEWALK DETAIL
NO SCALE
9 C501

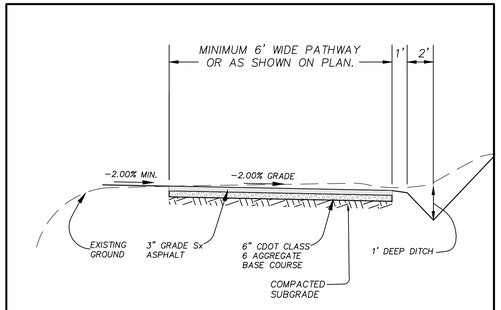


TYPICAL ASPHALT PATHWAY SECTION
NO SCALE
10 C501

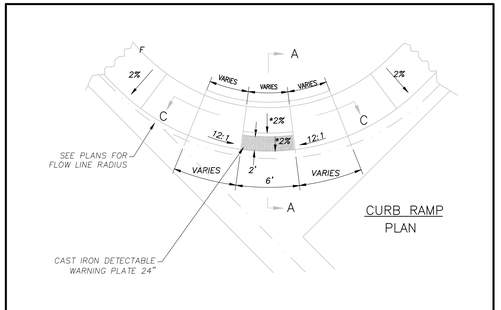


CURB RAMP
NO SCALE
11 C501

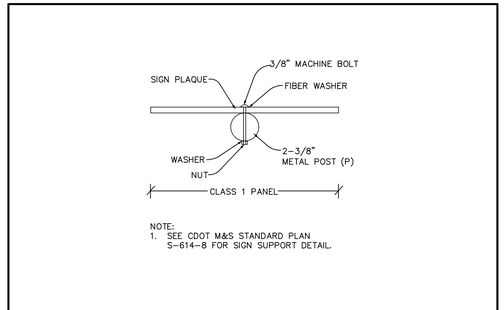


NOTE:
1. SEE CDOT M&S STANDARD PLAN S-614-8 FOR SIGN SUPPORT DETAIL.

SIGN DETAIL
NO SCALE
12 C501

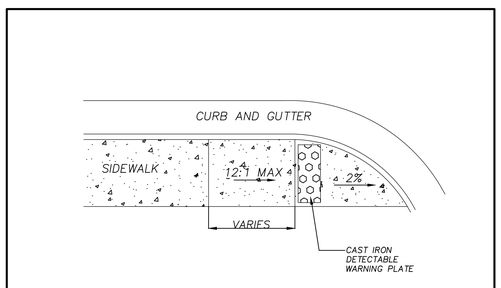


CURB RAMP AT DRIVEWAY-FLARES
NO SCALE
13 C501

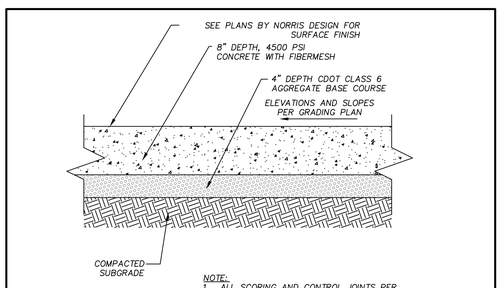


NOTE:
1. ALL SCORING AND CONTROL JOINTS PER CDOT M&S STANDARD PLAN M-412-1.
2. CONTRACTOR TO PROVIDE JOINT PLAN PRIOR TO CONSTRUCTION.

TYPICAL CONCRETE PAVEMENT SECTION
NO SCALE
16 C501

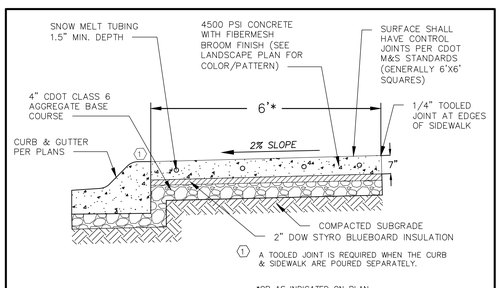


① A TOOLED JOINT IS REQUIRED WHEN THE CURB & SIDEWALK ARE POURED SEPARATELY.

*OR AS INDICATED ON PLAN

NOTE: SEE MECHANICAL PLAN FOR TYPE, SPACING AND DEPTH OF SNOWMELT TUBING

CONCRETE SIDEWALK W/ SNOW MELT DETAIL
NO SCALE
17 C501

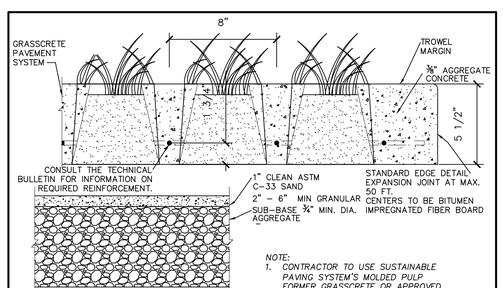


NOTE:
1. CONTRACTOR TO USE SUSTAINABLE PAVING SYSTEM'S MOLDED PULP FORMER GRASSCRETE OR APPROVED EQUIVALENT.

GRASSCRETE DETAIL
NO SCALE
18 C501


OZ ARCHITECTURE
3003 Larimer Street
Denver, Colorado 80205
phone 303.861.5704
www.ozarch.com

TETRA TECH
www.tetratech.com
130 SKI HILL ROAD SUITE 140
BRECKENRIDGE, COLORADO 80424
PHONE: (970)453-6394


# ONE RIVER RUN
75 HUNKI DORI CT.
KEYSTONE, CO 80435

PROJ. NO. 23526-20001
DRAWN: KGS
CHECKED: CDD
APPROVED: CDD
DATE: 2020/06/25

© OZ ARCHITECTURE

ONE RIVER RUN

ISSUED FOR:
ISSUE FOR PERMIT/ ISSUE FOR CONSTRUCTION

SHEET TITLE:
CIVIL DETAILS

SCALE: NTS
SHEET NUMBER
C-501

6/19/2020 2:07:47 PM - O:\PROJECTS\BRECKENRIDGE\23526\200-23526-20001\CAD\SHEETFILES\C501 DETAILS.DWG - PEOPLES, CHARLEY

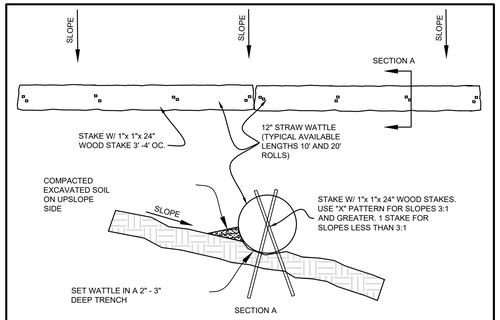


EROSION LOG BARRIER
NO SCALE
1 C502

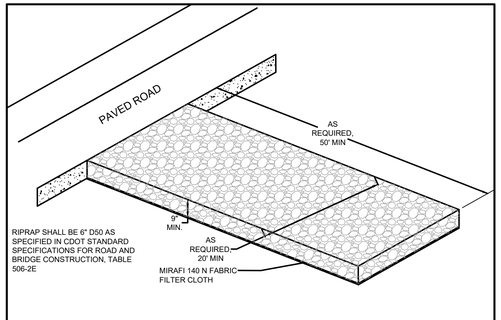


TEMPORARY VEHICLE TRACKING PAD
NO SCALE
2 C502

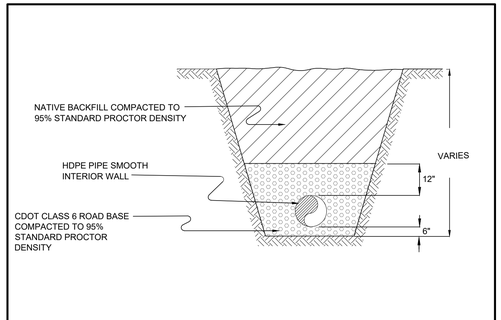


TYPICAL DRAINAGE PIPE TRENCH SECTION
NO SCALE
3 C502

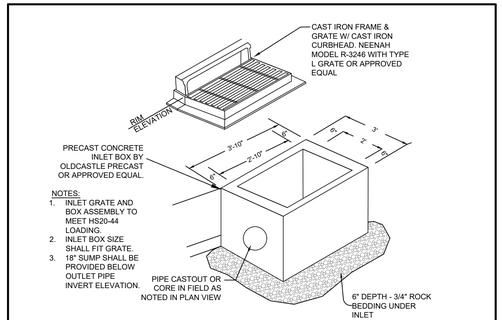


CURB COMBINATION INLET DETAIL
NO SCALE
4 C502

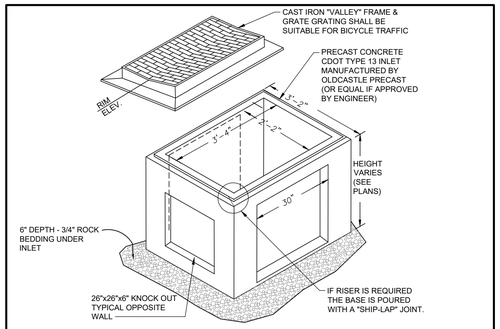


VALLEY INLET
NO SCALE
5 C502

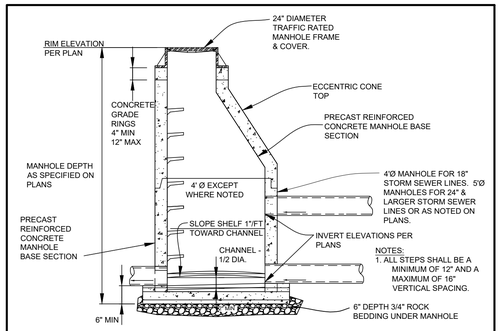


STORM SEWER PRECAST MANHOLE DETAIL
NO SCALE
6 C502

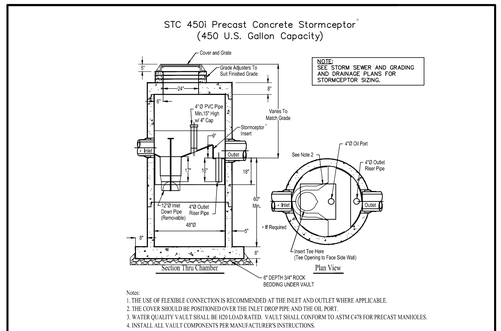


WATER QUALITY VAULT DETAIL
NO SCALE
7 C502

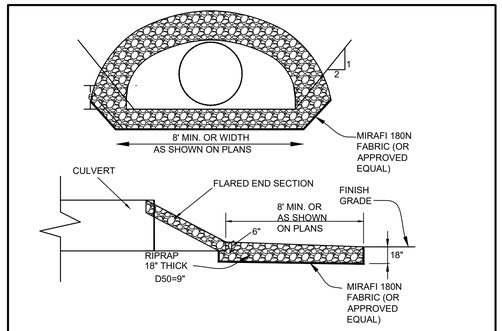


RIPRAP CULVERT OUTLET
NO SCALE
9 C502

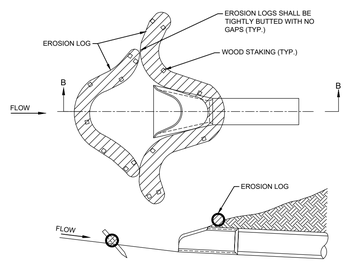


CULVERT INLET PROTECTION DETAIL
NO SCALE
11 C502

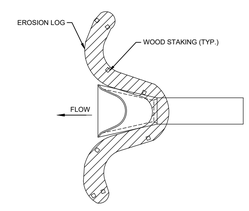


CULVERT OUTLET PROTECTION DETAIL
NO SCALE
12 C502

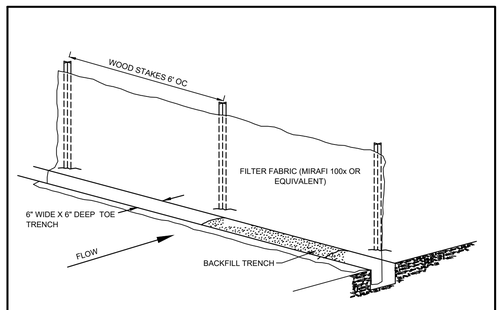


SILT FENCE DETAIL
NO SCALE
13 C502

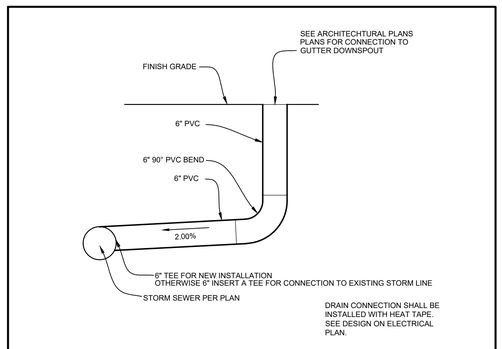


GUTTER DRAIN TO STORM LINE
NO SCALE
14 C502

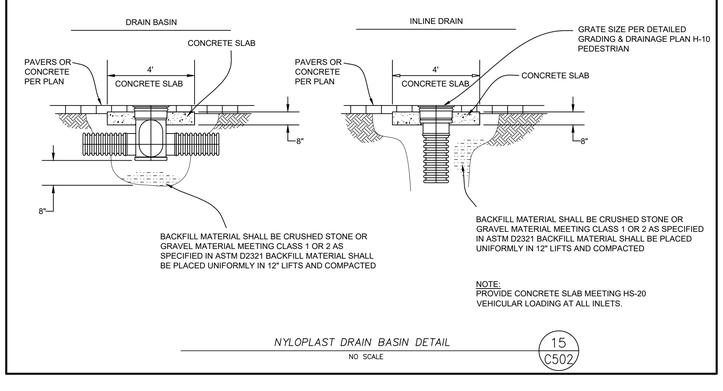


NYLOPLAST DRAIN BASIN DETAIL
NO SCALE
15 C502

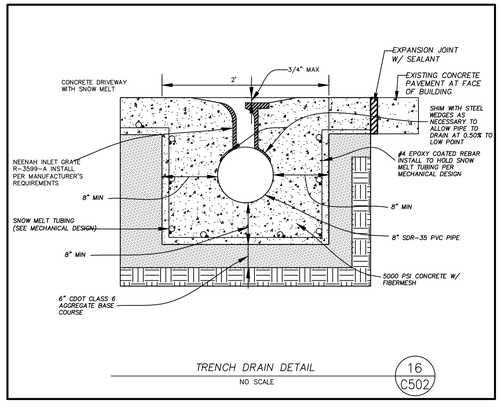


TRENCH DRAIN DETAIL
NO SCALE
16 C502

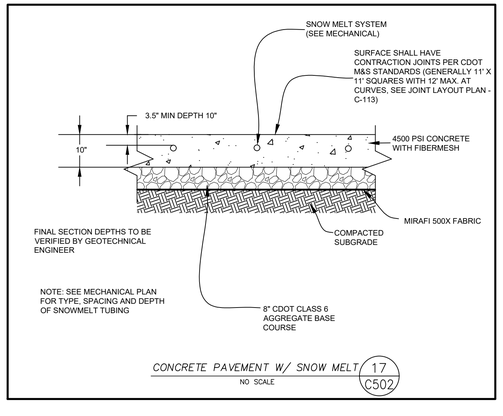


CONCRETE PAVEMENT W/ SNOW MELT
NO SCALE
17 C502

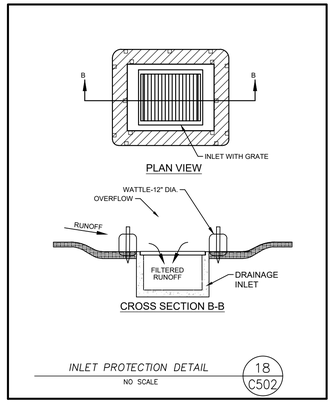


INLET PROTECTION DETAIL
NO SCALE
18 C502


OZ ARCHITECTURE
3003 Larimer Street
Denver, Colorado 80205
phone 303.861.5704
www.ozarch.com

TETRA TECH
www.tetratech.com
130 SKI HILL ROAD SUITE 140
BRECKENRIDGE, COLORADO 80424
PHONE: (970)453-6394


ONE RIVER RUN
75 HUNKI DORI CT.
KEYSTONE, CO 80435

PROJ. NO. 23526-20001
DRAWN: KGS
CHECKED: CDD
APPROVED: CDD
DATE: 2020/06/25

© OZ ARCHITECTURE

ONE RIVER RUN

ISSUED FOR:
ISSUE FOR PERMIT/ ISSUE FOR CONSTRUCTION

SHEET TITLE:
CIVIL DETAILS

SCALE: NTS
SHEET NUMBER
C-502

6/19/2020 2:07:50 PM - O:\PROJECTS\BRECKENRIDGE\23526\200-23526-20001\CAD\SHEETFILES\C501 DETAILS.DWG - PEOPLES, CHARLEY

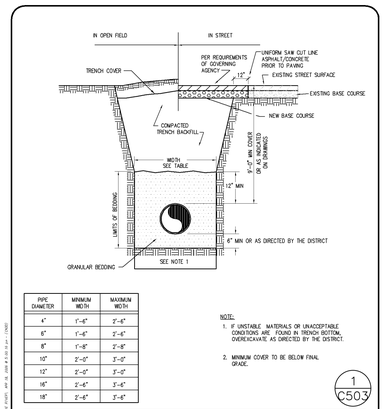


| PIPE DIAMETER | MINIMUM WIDTH | MAXIMUM WIDTH |
|---|---|---|
| 4" | 1'-4" | 2'-4" |
| 6" | 1'-4" | 2'-4" |
| 8" | 1'-8" | 2'-8" |
| 10" | 2'-0" | 3'-0" |
| 12" | 2'-0" | 3'-0" |
| 16" | 2'-4" | 3'-4" |
| 18" | 2'-4" | 3'-4" |

NOTE:
1. IF UNSTABLE MATERIALS OR UNACCEPTABLE CONDITIONS ARE FOUND IN TRENCH BOTTOM, OVEREXCAVATE AS DIRECTED BY THE DISTRICT.
2. MINIMUM COVER TO BE BELOW FINAL GRADE.

1 C503

**TYPICAL TRENCH SECTION DETAIL**

| NO. | DWN | DATE | REVISION |
|---|---|---|---|

Approved: | SHT: W-1
Date:04-2005 | Scale: NTS | DWN: RTW

SNAKE RIVER WATER DISTRICT — P.O. BOX 2595, DILLON, CO 80435

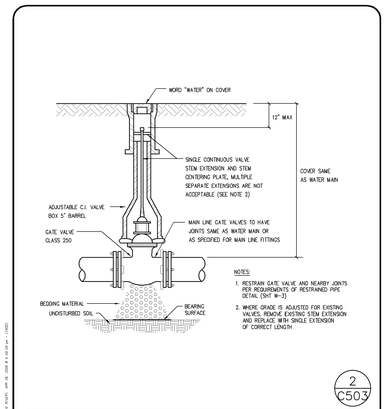


NOTES:
1. RESTRAIN GATE VALVE AND NEARBY JOINTS PER REQUIREMENTS OF RESTRAINED PIPE DETAIL (SHT W-3)
2. WHERE GRADE IS ADJUSTED FOR EXISTING VALVES, REMOVE EXISTING STEM EXTENSION AND REPLACE WITH SINGLE EXTENSION OF CORRECT LENGTH

2 C503

**TYPICAL MAIN LINE GATE VALVE DETAIL**

| NO. | DWN | DATE | REVISION |
|---|---|---|---|
| 1 | RTW | 10/17/03 | STEM EXTENSION |

Approved: | SHT: W-4
Date:04-2005 | Scale: NTS | DWN: RTW

SNAKE RIVER WATER DISTRICT — P.O. BOX 2595, DILLON, CO 80435

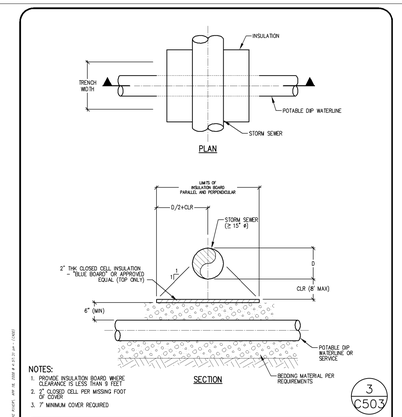


NOTES:
1. PROVIDE INSULATION BOARD WHERE CLEARANCE IS LESS THAN 9 FEET
2. 2" CLOSED CELL PER MISSING FOOT OF COVER
3. 7" MINIMUM COVER REQUIRED

3 C503

**TYPICAL WATERLINE INSULATION DETAIL**

| NO. | DWN | DATE | REVISION |
|---|---|---|---|

Approved: | SHT: W-07
Date:04-2005 | Scale: NTS | DWN: RTW

SNAKE RIVER WATER DISTRICT — P.O. BOX 2595, DILLON, CO 80435

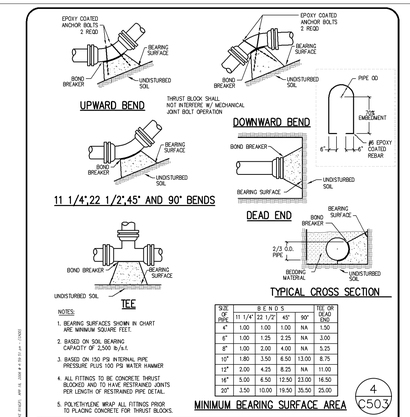


NOTES:
1. BEARING SURFACES SHOWN IN CHART ARE MINIMUM SQUARE FEET.
2. BASED ON SOIL BEARING CAPACITY OF 2,500 lb/s.f.
3. BASED ON 150 PSI INTERNAL PIPE PRESSURE PLUS 100 PSI WATER HAMMER
4. ALL FITTINGS TO BE CONCRETE THRUST BLOCKED AND TO HAVE RESTRAINED JOINTS PER LENGTH OF RESTRAINED PIPE DETAIL.
5. POLYETHYLENE WRAP ALL FITTINGS PRIOR TO PLACING CONCRETE FOR THRUST BLOCKS.

| SIZE OF PIPE | BENDS 11 1/4° | 22 1/2° | 45° | 90° | TEE OR DEAD END |
|---|---|---|---|---|---|
| 4" | 1.00 | 1.00 | 1.00 | NA | 1.50 |
| 6" | 1.00 | 1.25 | 2.25 | NA | 3.00 |
| 8" | 1.00 | 2.00 | 4.00 | NA | 5.25 |
| 10" | 1.80 | 3.50 | 6.50 | 13.00 | 8.75 |
| 12" | 2.00 | 4.25 | 8.25 | NA | 11.00 |
| 16" | 5.50 | 12.50 | 23.00 | 46.50 | 25.00 |
| 20" | 3.50 | 10.00 | 19.50 | 35.50 | 25.00 |

MINIMUM BEARING SURFACE AREA

4 C503

**TYPICAL CONCRETE THRUSTBLOCK BEARING SURFACES AND INSTALLATION DETAIL**

| NO. | DWN | DATE | REVISION |
|---|---|---|---|

Approved: | SHT: W-2
Date:04-2005 | Scale: NTS | DWN: RTW

SNAKE RIVER WATER DISTRICT — P.O. BOX 2595, DILLON, CO 80435

| PIPE SIZE | 4" | | 6" | | 8" | | 10" | | 12" | | 16" | | 18" | |
|---|---|---|---|---|---|---|---|---|---|---|---|---|---|---|
| | D | L | D | L | D | L | D | L | D | L | D | L | D | L |
| TEE | 3/4" | 10.0' | 3/4" | 14.0' | 3/4" | 18.0' | 3/4" | 22.0' | 3/4" | 30.0' | 3/4" | 60.0' | 1" | 74.0' |
| PLUG OR VALVE | 3/4" | 35.0' | 3/4" | 50.0' | 3/4" | 66.0' | 3/4" | 80.0' | 3/4" | 94.0' | 3/4" | 123.0' | 1" | 137.0' |
| 90° BEND | 3/4" | 10.0' | 3/4" | 14.0' | 3/4" | 18.0' | 3/4" | 22.0' | 3/4" | 26.0' | 3/4" | 34.0' | 1" | 38.0' |
| 45° BEND | 3/4" | 4.0' | 3/4" | 6.0' | 3/4" | 8.0' | 3/4" | 9.0' | 3/4" | 11.0' | 1" | 14.0' | 3/4" | 16.0' |
| 22 1/2° BEND | 3/4" | 2.0' | 3/4" | 3.0' | 3/4" | 4.0' | 3/4" | 4.0' | 3/4" | 5.0' | 3/4" | 7.0' | 3/4" | 8.0' |
| 11 1/4° BEND | 3/4" | 1.0' | 3/4" | 1.0' | 3/4" | 2.0' | 3/4" | 2.0' | 3/4" | 3.0' | 3/4" | 3.0' | 3/4" | 4.0' |

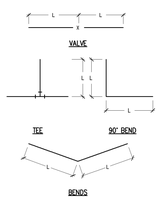


NOTES:
1. LENGTHS OF PIPE MEASURED EACH WAY FROM VALVES, BENDS, AND FITTINGS.
2. D=DIAMETER, L=LENGTH
3. MINIMUM 9.0' GROUND COVER REQUIRED.
4. BASED ON 150 PSI INTERNAL PRESSURE PLUS 100 PSI WATER HAMMER
5. LENGTH REFERS TO THE MINIMUM AMOUNT OF PIPE WHICH MUST RESTRAINED. JOINTS MUST BE RESTRAINED THAT ARE WITHIN LENGTHS (L) OF VALVE, BEND OR FITTING.
6. USE "MEGA-LUG" OR "FIELD-LOK" RESTRAINT OR APPROVED EQUAL.

5 C503

**TYPICAL LENGTH OF RESTRAINED PIPE DETAIL**

| NO. | DWN | DATE | REVISION |
|---|---|---|---|

Approved: | SHT: W-3
Date:04-2005 | Scale: NTS | DWN: RTW

SNAKE RIVER WATER DISTRICT — P.O. BOX 2595, DILLON, CO 80435

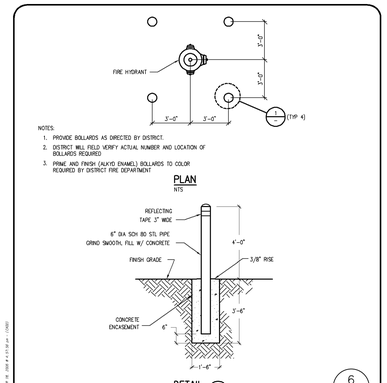


NOTES:
1. PROVIDE BOLLARDS AS DIRECTED BY DISTRICT.
2. DISTRICT WILL FIELD VERIFY ACTUAL NUMBER AND LOCATION OF BOLLARDS REQUIRED
3. PRIME AND FINISH (ALKYD ENAMEL) BOLLARDS TO COLOR REQUIRED BY DISTRICT FIRE DEPARTMENT

6 C503

**TYPICAL PIPE BOLLARD ASSEMBLY INSTALLATION DETAIL**

| NO. | DWN | DATE | REVISION |
|---|---|---|---|

Approved: | SHT: W-6
Date:04-2005 | Scale: NTS | DWN: RTW

SNAKE RIVER WATER DISTRICT — P.O. BOX 2595, DILLON, CO 80435

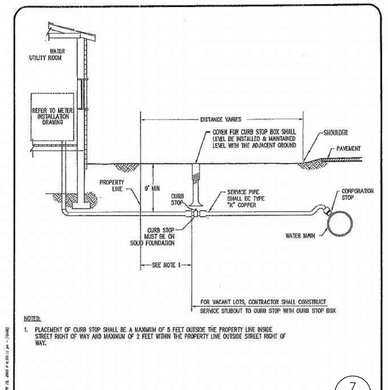


NOTES:
1. PLACEMENT OF CURB STOP SHALL BE A MAXIMUM OF 5 FEET OUTSIDE THE PROPERTY LINE INSIDE STREET RIGHT OF WAY AND MAXIMUM OF 2 FEET WITHIN THE PROPERTY LINE OUTSIDE STREET RIGHT OF WAY.

7 C503

**TYPICAL SMALL DIAMETER SERVICE LINE DETAIL**

| NO. | DWN | DATE | REVISION |
|---|---|---|---|

Approved: | SHT: W-8
Date:04-2005 | Scale: NTS | DWN: RTW

SNAKE RIVER WATER DISTRICT — P.O. BOX 2595, DILLON, CO 80435

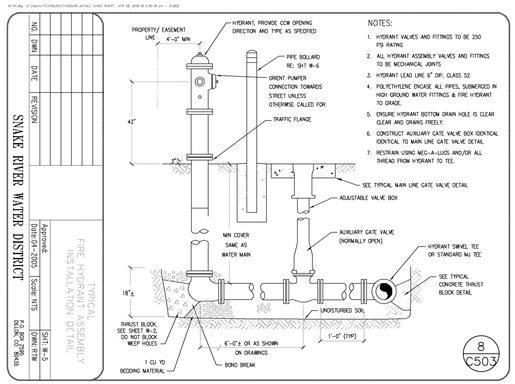


NOTES:
1. HYDRANT VALVES AND FITTINGS TO BE 250 PSI RATING
2. ALL HYDRANT ASSEMBLY VALVES AND FITTINGS TO BE MECHANICAL JOINTS
3. HYDRANT LEAD LINE 6" DIP, CLASS 52
4. POLYETHYLENE ENCASE ALL PIPES, SUBMERGED IN HIGH GROUND WATER FITTINGS & FIRE HYDRANT TO GRADE.
5. ENSURE HYDRANT BOTTOM DRAIN HOLE IS CLEAR CLEAR AND DRAINS FREELY.
6. CONSTRUCT AUXILIARY GATE VALVE BOX IDENTICAL (IDENTICAL TO MAIN LINE GATE VALVE DETAIL
7. RESTRAIN USING MEGA-A-LUGS AND/OR ALL THREAD FROM HYDRANT TO TEE.

8 C503

SNAKE RIVER WATER DISTRICT — TYPICAL FIRE HYDRANT ASSEMBLY INSTALLATION DETAIL — Approved: | Date:04-2005 | Scale: NTS | SHT: W-5 | DWN: RTW — P.O. BOX 2595, DILLON, CO 80435

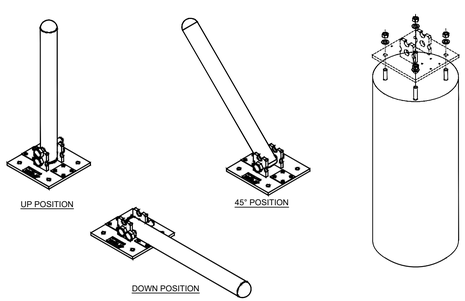


NOTES:

TRADITIONAL ROUND POST BOLLARD APPEARANCE

SINGLE LOCKING PIN FOR EASY ACCESS

CLEARANCE HEIGHT 4" IN LOWERED POSITION

SINGLE POST DESIGN WITH 2-1/2" STEEL PIPE

BOLLARD ASSEMBLY TO INCLUDE POST, BASE, CONCRETE FOUNDATION AND ALL HARDWARE.

INSTALL PER MANUFACTURERS REQUIREMENTS

*BOLLARD*
NO SCALE
9 C503

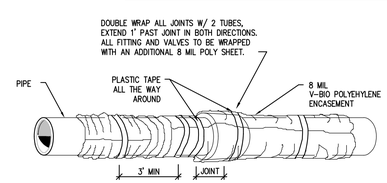


FIELD INSTALLATION – POLYETHYLENE WRAP

STEP 1– PLACE TUBE OF POLYETHYLENE MATERIAL ON PIPE PRIOR TO LOWERING IT INTO TRENCH. CUT 2' LONGER THAN PIPE LENGTH.

STEP 2– PULL THE TUBE OVER THE LENGTH OF THE PIPE. TAPE TUBE TO PIPE AT JOINT. PULL AND THEN FOLD MATERIAL AROUND THE ADJACENT SPIGOT END AND WRAP WITH TAPE TO HOLD THE PLASTIC TUBE IN PLACE.

STEP 3– OVERLAP FIRST TUBE WITH ADJACENT TUBE AND SECURE WITH PLASTIC ADHESIVE TAPE. OVERLAP TO ADJACENT PIPE, 1' MINIMUM. THE POLYETHYLENE TUBE MATERIAL COVERING THE PIPE SHALL BE LOOSE. EXCESS MATERIAL SHALL BE NEATLY DRAWN UP AROUND THE PIPE BARREL, FOLDED ON TOP OF PIPE AND TAPED IN PLACE AT 3' MIN INTERVALS.

NOTE: ALL RODDING SHALL BE POLYETHYLENE WRAPPED

POLYETHYLENE WRAP DETAIL
NO SCALE
10 C503

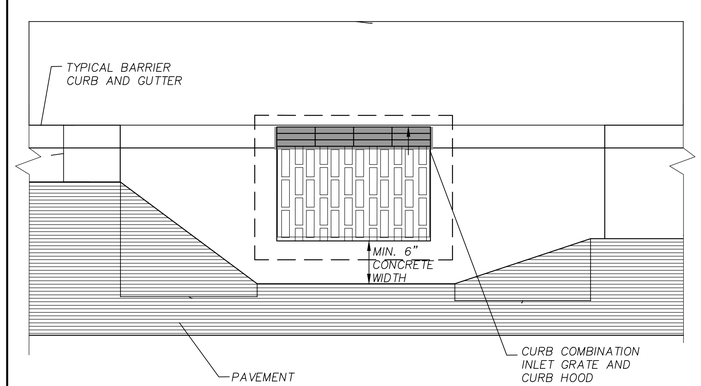


*CURB AND GUTTER TRANSITION AT INLETS DETAIL*
NO SCALE
11 C503


OZ ARCHITECTURE
3003 Larimer Street
Denver, Colorado 80205
phone 303.861.5704
www.ozarch.com

TETRA TECH
www.tetratech.com
130 SKI HILL ROAD SUITE 140
BRECKENRIDGE, COLORADO 80424
PHONE: (970)453-6394


# ONE RIVER RUN
75 HUNKI DORI CT.
KEYSTONE, CO 80435

PROJ. NO. 23526-20001
DRAWN: KGS
CHECKED: CDD
APPROVED: CDD
DATE: 2020/06/25

© OZ ARCHITECTURE

ONE RIVER RUN

ISSUED FOR:
ISSUE FOR PERMIT/ ISSUE FOR CONSTRUCTION

SHEET TITLE:
CIVIL DETAILS

SCALE: NTS
SHEET NUMBER
C-503

6/19/2020 2:07:53 PM - O:\PROJECTS\BRECKENRIDGE\23526\200-23526-20001\CAD\SHEETFILES\C501 DETAILS.DWG - PEOPLES, CHARLEY

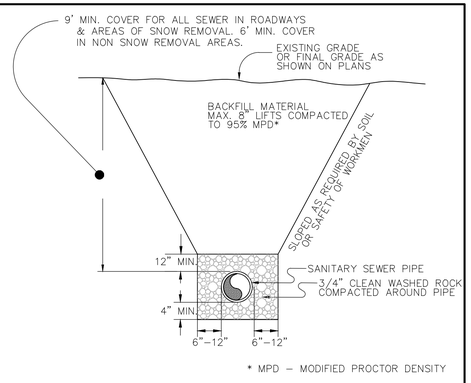


1 C504 SANITARY SEWER TRENCH DETAIL
NO SCALE

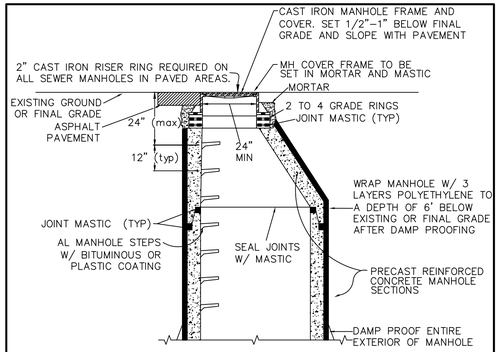


2 C504 SANITARY SEWER UPPER SECTION MANHOLE DETAIL
NO SCALE

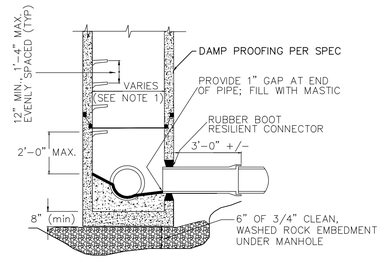


NOTES:
1. INSIDE DIAMETER OF MANHOLES TO BE 4'–0" FOR PIPE THROUGH 24", AND 5'–0" FOR PIPE 27" THROUGH 36".
2. ALL DEAD END MANHOLES SHALL HAVE A 4 FOOT STUB ON UPSTREAM SIDE, TERMINATED IN A BELL AND PLUG.

3 C504 SANITARY SEWER LOWER SECTION MANHOLE DETAIL
NO SCALE

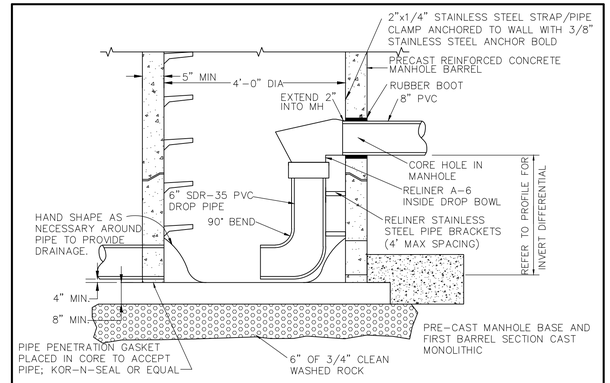


4 C504 SANITARY SEWER INTERNAL DROP MANHOLE DETAIL
NO SCALE

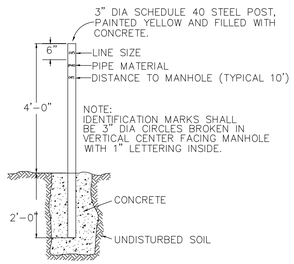


THIS DETAIL IS USED FOR MANHOLES IN UNPAVED AREAS.

5 C504 TYPICAL MANHOLE MARKER
NO SCALE

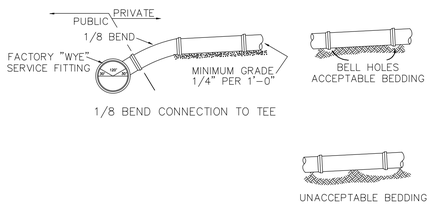


NOTES:
1. BELLS SHALL NOT TOUCH THE SIDES OR BOTTOM OF THE BELL HOLE.
2. THE BARREL SECTION SHALL BE SUPPORTED THROUGH ITS LENGTH.
3. THE MINIMUM SERVICE LINE GRADE SHALL BE 1/4" PER FT. (2%)
4. JOINTS SHALL BE WATER TIGHT.
5. INSTALL WATER TIGHT PLUG AND 4"x4" WOOD MARKER POST AT END OF SERVICE STUB

6 C504 TYPICAL SERVICE LINES
NO SCALE

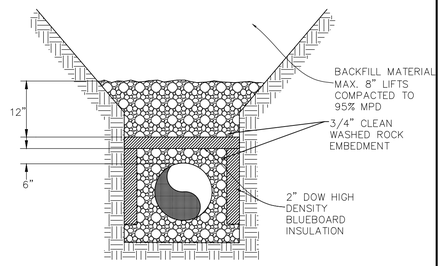


7 C504 SANITARY SEWER INSULATION DETAIL
NO SCALE

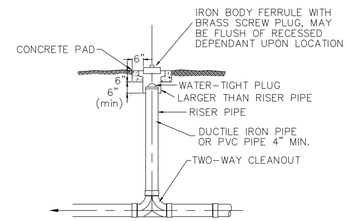


NOTES:
1. CLEAN–OUT SHALL BE CONSTRUCTED SO THAT THE SURFACE LOAD WILL NOT BE TRANSFERRED TO MAIN.
2. CONCRETE PAD SHALL BE INSTALLED SO THAT WATER WILL RUN AWAY FROM THE INSTALLATION.
3. IRON BODY FERRULE WITH BRASS SCREW PLUG TO BE FLUSH, HS–20 RATE, IF IN PAVEMENT.

8 C504 SANITARY SEWER SERVICE CLEAN OUT DETAIL
NO SCALE

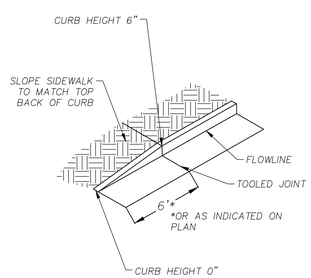


9 C504 CURB END TRANSITION
NO SCALE

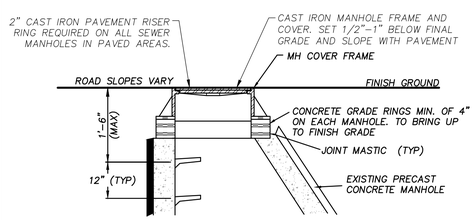


THIS DETAIL APPLIES TO ALL SANITARY SEWER AND STORM SEWER MANHOLES ON THE PROJECT INCLUDING NEW MANHOLES SET AND EXISTING MANHOLES THAT ARE ADJUSTED TO PROPOSED GRADES.

COSTS FOR SETTING NEW MANHOLES TO GRADE ARE INCIDENTAL TO THAT ITEM

10 C504 MANHOLE ADJUSTMENT DETAIL
NO SCALE

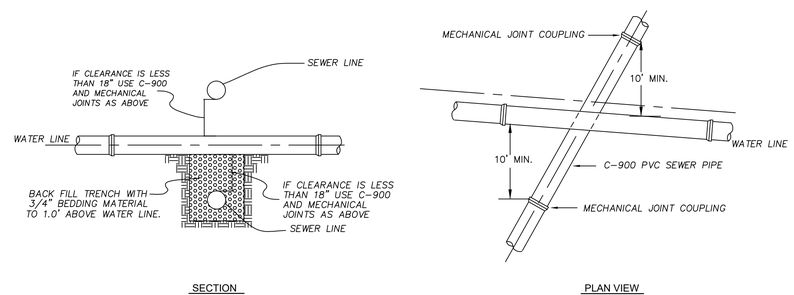


11 C504 WATER/SANITARY SEWER CROSSING DETAIL
NO SCALE


OZ ARCHITECTURE
3003 Larimer Street
Denver, Colorado 80205
phone 303.861.5704
www.ozarch.com

TETRA TECH
www.tetratech.com
130 SKI HILL ROAD SUITE 140
BRECKENRIDGE, COLORADO 80424
PHONE: (970)453-6394


# ONE RIVER RUN
## 75 HUNKI DORI CT.
## KEYSTONE, CO 80435

PROJ. NO. 23526-20001
DRAWN: KGS
CHECKED: CDD
APPROVED: CDD
DATE: 2020/06/25

© OZ ARCHITECTURE

ONE RIVER RUN

ISSUED FOR:
ISSUE FOR PERMIT/ ISSUE FOR CONSTRUCTION

SHEET TITLE:
CIVIL DETAILS

SCALE: NTS
SHEET NUMBER
C-504

6/19/2020 2:07:58 PM - O:\PROJECTS\BRECKENRIDGE\23526\200-23526-20001\CAD\SHEETFILES\C501 DETAILS.DWG - PEOPLES, CHARLEY

## GENERAL NOTES

1. THESE PLANS SHALL NOT BE UTILIZED FOR CONSTRUCTION OR PERMITTING UNLESS STATED FOR SUCH USE IN THE TITLE BLOCK.
2. DRAWINGS ARE INTENDED TO BE PRINTED ON 24" X 36" PAPER. PRINTING THESE DRAWINGS AT A DIFFERENT SIZE WILL IMPACT THE SCALE. VERIFY THE GRAPHIC SCALE BEFORE REFERENCING ANY MEASUREMENTS ON THESE SHEETS. THE RECIPIENT OF THESE DRAWINGS SHALL BE RESPONSIBLE FOR ANY ERRORS RESULTING FROM INCORRECT PRINTING, COPYING, OR ANY OTHER CHANGES THAT ALTER THE SCALE OF THE DRAWINGS.
3. VERIFY ALL PLAN DIMENSIONS PRIOR TO START OF CONSTRUCTION. NOTIFY THE OWNER'S REPRESENTATIVE TO ADDRESS ANY QUESTIONS OR CLARIFY ANY DISCREPANCIES.
4. WRITTEN DIMENSIONS TAKE PRECEDENCE OVER SCALED DIMENSIONS.
5. SUBMIT A CHANGE ORDER FOR APPROVAL FOR ANY CHANGES TO WORK SCOPE RESULTING FROM FIELD CONDITIONS OR DIRECTED BY OWNER'S REPRESENTATIVE WHICH REQUIRE ADDITIONAL COST TO THE OWNER PRIOR TO PERFORMANCE OF WORK.
6. THE CONTRACTOR SHALL PROVIDE A STAKED LAYOUT OF ALL SITE IMPROVEMENTS FOR INSPECTION BY THE OWNER'S REPRESENTATIVE AND MAKE MODIFICATIONS AS REQUIRED. ALL LAYOUT INFORMATION IS AVAILABLE IN DIGITAL FORMAT FOR USE BY THE CONTRACTOR.
7. IF A GEOTECHNICAL SOILS REPORT IS NOT AVAILABLE AT THE TIME OF CONSTRUCTION, NORRIS DESIGN RECOMMENDS A REPORT BE AUTHORIZED BY THE OWNER AND THAT ALL RECOMMENDATIONS OF THE REPORT ARE FOLLOWED DURING CONSTRUCTION. THE CONTRACTOR SHALL USE THESE CONTRACT DOCUMENTS AS A BASIS FOR THE BID. IF THE OWNER ELECTS TO PROVIDE A GEOTECHNICAL REPORT, THE CONTRACTOR SHALL REVIEW THE REPORT AND SUBMIT AN APPROPRIATE CHANGE ORDER TO THE OWNER'S REPRESENTATIVE IF ADDITIONAL COSTS ARE REQUESTED.
8. CONTRACTOR SHALL CONFIRM THAT SITE CONDITIONS ARE SIMILAR TO THE PLANS, WITHIN TOLERANCES STATED IN THE CONTRACT DOCUMENTS, AND SATISFACTORY TO THE CONTRACTOR PRIOR TO START OF WORK. SHOULD SITE CONDITIONS BE DIFFERENT THAN REPRESENTED ON THE PLANS OR UNSATISFACTORY TO THE CONTRACTOR, THE CONTRACTOR SHALL CONTACT THE OWNER'S REPRESENTATIVE FOR CLARIFICATION AND FURTHER DIRECTION.
9. CONTRACTOR IS RESPONSIBLE TO PAY FOR, AND OBTAIN, ANY REQUIRED APPLICATIONS, PERMITTING, LICENSES, INSPECTIONS AND METERS ASSOCIATED WITH WORK.
10. THE CONTRACTOR SHALL BE RESPONSIBLE FOR ANY FINES OR PENALTIES ASSESSED TO THE OWNER RELATING TO ANY VIOLATIONS OR NON-CONFORMANCE WITH THE PLANS, SPECIFICATIONS, CONTRACT DOCUMENTS, JURISDICTIONAL CODES, AND REGULATORY AGENCIES.
11. THE CONTRACTOR SHALL BE RESPONSIBLE FOR COORDINATION OF ALL UTILITY LOCATES PRIOR TO ANY EXCAVATION. REFER TO ENGINEERING UTILITY PLANS FOR ALL PROPOSED UTILITY LOCATIONS AND DETAILS. NOTIFY OWNER'S REPRESENTATIVE IF EXISTING OR PROPOSED UTILITIES INTERFERE WITH THE ABILITY TO PERFORM WORK.
12. UNLESS IDENTIFIED ON THE PLANS FOR DEMOLITION OR REMOVAL, THE CONTRACTOR IS RESPONSIBLE FOR THE COST TO REPAIR UTILITIES, ADJACENT OR EXISTING LANDSCAPE, ADJACENT OR EXISTING PAVING, OR ANY PUBLIC AND PRIVATE PROPERTY THAT IS DAMAGED BY THE CONTRACTOR OR THEIR SUBCONTRACTOR'S OPERATIONS DURING INSTALLATION, ESTABLISHMENT OR DURING THE SPECIFIED MAINTENANCE PERIOD. ALL DAMAGES SHALL BE REPAIRED TO PRE-CONSTRUCTION CONDITIONS AS DETERMINED BY THE OWNER'S REPRESENTATIVE. CONTRACTOR SHALL BE RESPONSIBLE FOR LOGGING ANY DAMAGES PRIOR TO START OF CONSTRUCTION AND DURING THE CONTRACT PERIOD.
13. ALL WORK SHALL BE CONFINED TO THE AREA WITHIN THE CONSTRUCTION LIMITS AS SHOWN ON THE PLANS. ANY AREAS OR IMPROVEMENTS DISTURBED OUTSIDE THESE LIMITS SHALL BE RETURNED TO THEIR ORIGINAL CONDITION AT THE CONTRACTOR'S EXPENSE. IN THE EVENT THE CONTRACTOR REQUIRES A MODIFICATION TO THE CONSTRUCTION LIMITS, WRITTEN PERMISSION MUST BE OBTAINED FROM THE OWNER'S REPRESENTATIVE PRIOR TO ANY DISTURBANCE OUTSIDE OF THE LIMITS OF WORK.
14. THE CONTRACTOR SHALL BE RESPONSIBLE FOR THE REPAIR OF ANY OF THEIR TRENCHES OR EXCAVATIONS THAT SETTLE.
15. THE CONTRACTOR SHALL BE RESPONSIBLE TO PREPARE AND SUBMIT A TRAFFIC CONTROL PLAN TO THE APPROPRIATE JURISDICTIONAL AGENCIES AND THE OWNER'S REPRESENTATIVE IF THEIR WORK AND OPERATIONS AFFECT OR IMPACT THE PUBLIC RIGHTS-OF-WAY. OBTAIN APPROVAL PRIOR TO ANY WORK WHICH AFFECTS OR IMPACTS THE PUBLIC RIGHTS-OF-WAY. THE CONTRACTOR SHALL BE RESPONSIBLE FOR ANY FINES OR PENALTIES ASSESSED TO THE OWNER RELATING TO THIS REQUIREMENT DURING THE CONTRACT PERIOD.
16. SIGHT TRIANGLES AND SIGHT LINES SHALL REMAIN UNOBSTRUCTED BY EQUIPMENT, CONSTRUCTION MATERIALS, PLANT MATERIAL OR ANY OTHER VISUAL OBSTACLE DURING THE CONTRACT PERIOD AND AT MATURITY OF PLANTS PER LOCAL JURISDICTIONAL REQUIREMENTS. NO PLANT MATERIAL OTHER THAN GROUND COVER IS ALLOWED TO BE PLANTED ADJACENT TO FIRE HYDRANTS AS STIPULATED BY JURISDICTIONAL REQUIREMENTS.
17. COORDINATE SITE ACCESS, STAGING, STORAGE AND CLEANOUT AREAS WITH OWNER'S REPRESENTATIVE.
18. CONTRACTOR IS RESPONSIBLE FOR PROVIDING TEMPORARY SAFETY FENCING AND BARRIERS AROUND ALL IMPROVEMENTS SUCH AS WALLS, PLAY STRUCTURES, EXCAVATIONS, ETC. ASSOCIATED WITH THEIR WORK UNTIL SUCH FACILITIES ARE COMPLETELY INSTALLED PER THE PLANS, SPECIFICATIONS AND MANUFACTURER'S RECOMMENDATIONS.
19. CONTRACTOR SHALL BE RESPONSIBLE FOR PROTECTION OF THEIR MATERIAL STOCK PILES AND WORK FROM VANDALISM, EROSION OR UNINTENDED DISTURBANCE DURING THE CONSTRUCTION PERIOD AND UNTIL FINAL ACCEPTANCE IS ISSUED.
20. THE CONTRACTOR SHALL KNOW, UNDERSTAND AND ABIDE BY ANY STORM WATER POLLUTION PREVENTION PLAN (SWPPP) ASSOCIATED WITH THE SITE. IF A STORM WATER POLLUTION PREVENTION PLAN IS NOT PROVIDED BY THE OWNER'S REPRESENTATIVE, REQUEST A COPY BEFORE PERFORMANCE OF ANY SITE WORK.
21. MAINTAIN ANY STORM WATER MANAGEMENT FACILITIES THAT EXIST ON SITE FOR FULL FUNCTIONALITY. THE CONTRACTOR SHALL INSTALL AND MAINTAIN ANY NEW STORM WATER MANAGEMENT FACILITIES THAT ARE IDENTIFIED IN THE SCOPE OF WORK TO FULL FUNCTIONALITY. THE CONTRACTOR SHALL BE RESPONSIBLE FOR ANY FINES OR PENALTIES ASSESSED TO THE OWNER FOR FAILURE TO MAINTAIN STORM WATER MANAGEMENT FACILITIES DURING THE CONTRACT PERIOD.
22. THE CONTRACTOR SHALL PREVENT SEDIMENT, DEBRIS AND ALL OTHER POLLUTANTS FROM EXITING THE SITE OR ENTERING THE STORM SEWER SYSTEM DURING ALL DEMOLITION OR CONSTRUCTION OPERATIONS THAT ARE PART OF THIS PROJECT. THE CONTRACTOR SHALL BE RESPONSIBLE FOR ANY FINES OR PENALTIES ASSESSED TO THE OWNER RELATING TO THESE REQUIREMENTS DURING THEIR CONTRACTED COURSE OF WORK.
23. THE CONTRACTOR SHALL BE RESPONSIBLE TO PREVENT ANY IMPACTS TO ADJACENT WATERWAYS, WETLANDS, OR OTHER ENVIRONMENTALLY SENSITIVE AREAS RESULTING FROM WORK DONE AS PART OF THIS PROJECT. THE CONTRACTOR SHALL BE RESPONSIBLE FOR ANY FINES OR PENALTIES ASSESSED TO THE OWNER RELATING TO THESE STANDARDS DURING THEIR CONTRACTED COURSE OF WORK.
24. THE CONTRACTOR AND/OR THEIR AUTHORIZED AGENTS SHALL ENSURE THAT ALL LOADS OF CONSTRUCTION MATERIAL IMPORTED TO OR EXPORTED FROM THE PROJECT SITE SHALL BE PROPERLY COVERED TO PREVENT LOSS OF MATERIAL DURING TRANSPORT. TRANSPORTATION METHODS ON PUBLIC RIGHT-OF WAYS SHALL CONFORM TO JURISDICTIONAL REQUIREMENTS. THE CONTRACTOR SHALL BE RESPONSIBLE FOR ANY FINES OR PENALTIES ASSESSED TO THE OWNER RELATING TO THESE REQUIREMENTS.
25. THE CLEANING OF EQUIPMENT IS PROHIBITED AT THE JOB SITE UNLESS AUTHORIZED BY THE OWNER'S REPRESENTATIVE IN A DESIGNATED AREA. THE DISCHARGE OF WATER, WASTE CONCRETE, POLLUTANTS, OR OTHER MATERIALS SHALL ONLY OCCUR IN AREAS DESIGNED FOR SUCH USE AND APPROVED BY THE OWNER'S REPRESENTATIVE.
26. THE CLEANING OF CONCRETE EQUIPMENT IS PROHIBITED AT THE JOB SITE EXCEPT IN DESIGNATED CONCRETE WASHOUT AREAS. THE DISCHARGE OF WATER CONTAINING WASTE CONCRETE IN THE STORM SEWER IS PROHIBITED.
27. OPEN SPACE SWALES: IF SWALES ARE EXISTING ON SITE AND ARE NOT INTENDED TO BE MODIFIED AS PART OF THE PLANS, THE CONTRACTOR SHALL BE RESPONSIBLE TO MAINTAIN THE CONVEYANCE OF WATER WITHIN THE SWALES DURING THE CONTRACT PERIOD. THE CONTRACTOR SHALL BE RESPONSIBLE FOR ANY DIVERSION OR PUMPING OF WATER IF REQUIRED TO COMPLETE WORK. ANY SWALES DISTURBED BY THE CONTRACTOR SHALL BE REPAIRED/RESTORED TO THEIR ORIGINAL CONDITION. IF THE SWALE NEEDS TO BE DISTURBED OR MODIFIED FOR ANY REASON, THE CONTRACTOR SHALL NOTIFY THE OWNER'S REPRESENTATIVE FOR APPROVAL PRIOR TO DISTURBANCE.
28. MAINTENANCE ACCESS BENCHES: IF MAINTENANCE BENCHES OR ACCESS ROADS EXIST ON SITE AND ARE NOT INTENDED TO BE MODIFIED AS PART OF THE PLANS, THE CONTRACTOR SHALL MINIMIZE DISTURBANCE TO THE BENCHES OR ACCESS ROADS DURING CONSTRUCTION. ANY BENCHES OR ACCESS ROADS DISTURBED BY THE CONTRACTOR SHALL BE REPAIRED/RESTORED TO THEIR ORIGINAL CONDITION. THE CONTRACTOR SHALL MAINTAIN ACCESS TO ALL EXISTING BENCHES AND ACCESS ROADS DURING THE CONSTRUCTION PERIOD. IF ACCESS NEEDS TO BE BLOCKED FOR ANY REASON, THE CONTRACTOR SHALL NOTIFY THE OWNER'S REPRESENTATIVE FOR APPROVAL PRIOR TO INTERRUPTION OF ACCESS.
29. LOCAL, STATE AND FEDERAL JURISDICTIONAL REQUIREMENTS, RESTRICTIONS OR PROCEDURES SHALL SUPERSEDE THESE PLANS, NOTES AND SPECIFICATIONS WHEN MORE STRINGENT. NOTIFY THE OWNER'S REPRESENTATIVE IF CONFLICTS OCCUR.

## LANDSCAPE NOTES

1. THE CONTRACTOR SHALL FOLLOW THE LANDSCAPE PLANS AND SPECIFICATIONS AS CLOSELY AS POSSIBLE. ANY SUBSTITUTION OR ALTERATION SHALL NOT BE ALLOWED WITHOUT APPROVAL OF THE OWNER'S REPRESENTATIVE. OVERALL PLANT QUANTITY AND QUALITY SHALL BE CONSISTENT WITH THE PLANS.
2. THE CONTRACTOR IS RESPONSIBLE FOR VERIFYING ALL PLANT QUANTITIES. GRAPHIC QUANTITIES TAKES PRECEDENCE OVER WRITTEN QUANTITIES.
3. THE OWNER'S REPRESENTATIVE RESERVES THE RIGHT TO INSPECT AND TAG ALL PLANT MATERIAL PRIOR TO SHIPPING TO THE SITE. IN ALL CASES, THE OWNER'S REPRESENTATIVE MAY REJECT PLANT MATERIAL AT THE SITE IF MATERIAL IS DAMAGED, DISEASED, OR DECLINING IN HEALTH AT THE TIME OF ONSITE INSPECTIONS OR IF THE PLANT MATERIAL DOES NOT MEET THE MINIMUM SPECIFIED STANDARD IDENTIFIED ON THE PLANS AND IN THE SPECIFICATIONS. THE CONTRACTOR SHALL COORDINATE WITH THE OWNER'S REPRESENTATIVE FOR INSPECTION AND APPROVAL OF ALL MATERIALS AND PRODUCTS PRIOR TO INSTALLATION.
4. THE OWNER'S REPRESENTATIVE MAY ELECT TO UPSIZE PLANT MATERIAL AT THEIR DISCRETION BASED ON SELECTION, AVAILABILITY, OR TO ENHANCE SPECIFIC AREAS OF THE PROJECT. THE CONTRACTOR SHALL VERIFY PLANT MATERIAL SIZES WITH OWNER'S REPRESENTATIVE PRIOR TO PURCHASING, SHIPPING OR STOCKING OF PLANT MATERIALS. SUBMIT CHANGE ORDER REQUEST TO OWNER'S REPRESENTATIVE FOR APPROVAL IF ADDITIONAL COST IS REQUESTED BY THE CONTRACTOR PRIOR TO INSTALLATION. RE-STOCKING CHARGES WILL NOT BE APPROVED IF THE CONTRACTOR FAILS TO SUBMIT A REQUEST FOR MATERIAL CHANGES.
5. THE CONTRACTOR SHALL WARRANTY ALL CONTRACTED WORK AND MATERIALS FOR A PERIOD OF ONE YEAR AFTER SUBSTANTIAL COMPLETION HAS BEEN ISSUED BY THE OWNER'S REPRESENTATIVE FOR THE ENTIRE PROJECT UNLESS OTHERWISE SPECIFIED IN THE CONTRACT DOCUMENTS OR SPECIFICATIONS.
6. LANDSCAPE MATERIAL LOCATIONS SHALL HAVE PRECEDENCE OVER IRRIGATION MAINLINE AND LATERAL LOCATIONS. COORDINATE INSTALLATION OF IRRIGATION EQUIPMENT SO THAT IT DOES NOT INTERFERE WITH THE PLANTING OF TREES OR OTHER LANDSCAPE MATERIAL.
7. THE LANDSCAPE CONTRACTOR SHALL BE RESPONSIBLE FOR ENSURING POSITIVE DRAINAGE EXISTS IN ALL LANDSCAPE AREAS. SURFACE DRAINAGE ON LANDSCAPE AREAS SHALL NOT FLOW TOWARD STRUCTURES AND FOUNDATIONS. MAINTAIN SLOPE AWAY FROM FOUNDATIONS PER THE GEOTECHNICAL REPORT RECOMMENDATIONS. ALL LANDSCAPE AREAS BETWEEN WALKS AND CURBS SHALL DRAIN FREELY TO THE CURB UNLESS OTHERWISE IDENTIFIED ON THE GRADING PLAN. IN NO CASE SHALL THE GRADE, TURF THATCH, OR OTHER LANDSCAPE MATERIALS DAM WATER AGAINST WALKS. MINIMUM SLOPES ON LANDSCAPE AREAS SHALL BE 2%; MAXIMUM SLOPE SHALL BE 25% UNLESS SPECIFICALLY IDENTIFIED ON THE PLANS OR APPROVED BY THE OWNER'S REPRESENTATIVE.
8. PRIOR TO INSTALLATION OF PLANT MATERIALS, AREAS THAT HAVE BEEN COMPACTED OR DISTURBED BY CONSTRUCTION ACTIVITY SHALL BE THOROUGHLY LOOSENED TO A DEPTH OF 8" - 12" AND AMENDED PER SPECIFICATIONS.
9. ALL LANDSCAPED AREAS ARE TO RECEIVE ORGANIC SOIL PREPARATION AT 4 cu.yards/1,000sf OR AS NOTED IN THE TECHNICAL SPECIFICATIONS.
10. TREES SHALL NOT BE LOCATED IN DRAINAGE SWALES, DRAINAGE AREAS, OR UTILITY EASEMENTS. CONTACT OWNER'S REPRESENTATIVE FOR RELOCATION OF PLANTS IN QUESTIONABLE AREAS PRIOR TO INSTALLATION.
11. THE CENTER OF EVERGREEN TREES SHALL NOT BE PLACED CLOSER THAN 8' AND THE CENTER OF ORNAMENTAL TREES CLOSER THAN 6' FROM A SIDEWALK, STREET OR DRIVE LANE. EVERGREEN TREES SHALL NOT BE LOCATED ANY CLOSER THAN 15' FROM IRRIGATION ROTOR HEADS. NOTIFY OWNER'S REPRESENTATIVE IF TREE LOCATIONS CONFLICT WITH THESE STANDARDS FOR FURTHER DIRECTION.
12. ALL EVERGREEN TREES SHALL BE FULLY BRANCHED TO THE GROUND AND SHALL NOT EXHIBIT SIGNS OF ACCELERATED GROWTH AS DETERMINED BY THE OWNER'S REPRESENTATIVE.
13. ALL TREES ARE TO BE STAKED AND GUYED PER DETAILS FOR A PERIOD OF 3 YEARS. THE CONTRACTOR SHALL BE RESPONSIBLE FOR REMOVING STAKES AT THE END OF 3 YEARS FROM ACCEPTANCE OF LANDSCAPE INSTALLATION BY THE OWNER'S REPRESENTATIVE. OBTAIN APPROVAL BY OWNER'S REPRESENTATIVE PRIOR TO REMOVAL.
14. ALL TREES INSTALLED ABOVE RETAINING WALLS UTILIZING GEO-GRID MUST BE HAND DUG TO PROTECT GEO-GRID. IF GEO-GRID MUST BE CUT TO INSTALL TREES, APPROVAL MUST BE GIVEN BY OWNER'S REPRESENTATIVE PRIOR TO DOING WORK.
15. ALL TREES IN SEED OR TURF AREAS SHALL RECEIVE MULCH RINGS. OBTAIN APPROVAL FROM OWNER'S REPRESENTATIVE FOR ANY TREES THAT WILL NOT BE MULCHED FOR EXCESSIVE MOISTURE REASONS.
16. SHRUB, GROUNDCOVER AND PERENNIAL BEDS ARE TO BE CONTAINED BY SPADE CUT EDGER. EDGER IS NOT REQUIRED WHEN ADJACENT TO CURBS, WALLS, OR WALKS WITHIN 3' OF PRE-MULCHED FINAL GRADE. EDGER SHALL NOT BE REQUIRED TO SEPARATE MULCH TYPES UNLESS SPECIFIED ON THE PLANS.
17. ALL SHRUB BEDS ARE TO BE MULCHED WITH PLANTING BED MULCH, REFER TO MATERIALS SCHEDULE FOR TYPE AND DEPTH. ALL GROUND COVER AND PERENNIAL FLOWER BEDS SHALL BE MULCHED WITH PLANTER MULCH, REFER TO MATERIALS SCHEDULE FOR TYPE AND DEPTH. NO WEED CONTROL FABRIC IS REQUIRED IN GROUNDCOVER OR PERENNIAL AREAS.
18. AT SEED AREA BOUNDARIES ADJACENT TO EXISTING NATIVE AREAS, OVERLAP ABUTTING NATIVE AREAS BY THE FULL WIDTH OF THE SEEDER.
19. EXISTING TURF AREAS THAT ARE DISTURBED DURING CONSTRUCTION, ESTABLISHMENT AND THE MAINTENANCE PERIOD SHALL BE RESTORED WITH NEW SOD TO MATCH EXISTING TURF SPECIES. DISTURBED NATIVE AREAS WHICH ARE TO REMAIN SHALL BE OVER SEEDED AND RESTORED WITH SPECIFIED SEED MIX.
20. CONTRACTOR SHALL OVER SEED ALL MAINTENANCE OR SERVICE ACCESS BENCHES AND ROADS WITH SPECIFIED SEED MIX UNLESS OTHERWISE NOTED ON THE PLANS.
21. ALL SEEDED SLOPES EXCEEDING 25% IN GRADE (4:1) SHALL RECEIVE EROSION CONTROL BLANKETS. PRIOR TO INSTALLATION, NOTIFY OWNER'S REPRESENTATIVE FOR APPROVAL OF LOCATION AND ANY ADDITIONAL COST IF A CHANGE ORDER IS NECESSARY.
22. WHEN COMPLETE, ALL GRADES SHALL BE WITHIN +/- 1/8" OF FINISHED GRADES AS SHOWN ON THE PLANS.
23. ALL POTTED PLANTERS TO BE PLUMBED WITH DRIP IRRIGATION WHERE NOTED. ALL OTHER PLANTERS TO RECEIVE WATERING BLADDERS.

## LAYOUT NOTES

1. WRITTEN DIMENSIONS WILL TAKE PRECEDENCE OVER SCALED DIMENSIONS.
2. SHOULD SITE CONDITIONS BE DIFFERENT THAN WHAT IS INDICATED ON THE DRAWINGS CONTACT THE LANDSCAPE ARCHITECT IMMEDIATELY FOR CLARIFICATION.
3. CURVED WALKS AND CURB EDGES ARE INTENDED TO BE CONSTRUCTED WITH SMOOTH FLOWING CURVES. ANYTHING OTHER THAN SMOOTH FLOWING CURVES WILL BE REJECTED.
4. THE CONTRACTOR SHALL PROVIDE A STAKED LAYOUT OF ALL SITE IMPROVEMENTS FOR INSPECTION BY THE OWNER'S REPRESENTATIVE AND MAKE MODIFICATIONS AS REQUIRED AT NO ADDITIONAL COST TO THE OWNER.
5. THE CONTRACTOR SHALL INSTALL SLEEVING FOR IRRIGATION IMPROVEMENTS PRIOR TO INSTALLING CONCRETE FLATWORK AND PAVERS. INSTALL 3" PVC SLEEVE UNDER ALL DRIVES.
6. LAY OUT WALKS, SCORE JOINTS AND PAVING PATTERNS AS CLOSELY AS POSSIBLE TO PLANS, DETAILS, AND SPECIFICATIONS. DO NOT DEVIATE FROM PLANS UNLESS SPECIFIC APPROVAL IS OBTAINED FROM THE OWNER'S REPRESENTATIVE.
7. ALL WORK SHALL BE CONFINED TO THE AREA WITHIN THE CONSTRUCTION LIMITS AS SHOWN ON THE PLANS. ANY AREAS OR IMPROVEMENTS DISTURBED OUTSIDE THESE LIMITS SHALL BE RETURNED TO THEIR ORIGINAL CONDITION AT THE CONTRACTOR'S EXPENSE. IN THE EVENT THE CONTRACTOR REQUIRES A MODIFICATION TO THE CONSTRUCTION LIMITS, WRITTEN PERMISSION MUST BE OBTAINED FROM THE LANDSCAPE ARCHITECT PRIOR TO ANY DISTURBANCE OUTSIDE OF THE LIMITS OF WORK. SEE TECHNICAL SPECIFICATIONS.

## MAINTENANCE NOTES

TREES, SHRUBS AND GROUND COVERS

1. MAINTAIN TREES, SHRUBS, GROUND COVERS AND PLANTS BY PRUNING, CULTIVATING, WATERING, WEEDING, FERTILIZING, RESTORING PLANTING SAUCERS, TIGHTENING AND REPAIRING STAKES AND GUYS WORE SUPPORTS, AND RESETTING TO PROPER GRADES OR VERTICAL POSITION, AS REQUIRED TO ESTABLISH HEALTHY, VIABLE PLANTINGS. SPRAY AS REQUIRED TO KEEP TREES AND SHRUBS FREE OF INSECTS AND DISEASE.
2. WATERING: MAINTAIN LARGE ENOUGH WATER BASINS AROUND PLANTS SO THAT ENOUGH WATER CAN BE APPLIED TO ESTABLISH MOISTURE THROUGHOUT ENTIRE ROOT ZONE. UTILIZE MULCHES TO REDUCE EVAPORATION AND WATERING FREQUENCY. ALL TREES SHALL BE DRIP IRRIGATED.
3. PRUNE AS REQUIRED AT TIME OF PLANTING AND AS NEEDED TO CORRECT DAMAGE.
4. STAKES AND GUY WIRES: INSPECT REGULARLY TO PREVENT GIRDLING OF TRUNKS OR BRANCHES AND TO PREVENT RUBBING WHICH MIGHT CAUSE BARK WOUNDS. REMOVE AND REPLACE DAMAGED STAKES AND GUYS AS DIRECTED BY THE OWNER.
5. WEED CONTROL: MAINTAIN TREE AND SHRUB BASINS FREE OF WEEDS AND GRASSES ON A WEEKLY BASIS. FREQUENT SOIL CULTIVATION THAT MIGHT DESTROY SHALLOW ROOTS IS NOT PERMITTED.
6. INSECTS AND DISEASE CONTROL: CONTROL INSECTS AND DISEASE AS NECESSARY TO PREVENT DAMAGE TO THE HEALTH OR APPEARANCE OF PLANTS. USE ONLY APPROVED MATERIALS AND METHODS. DEAD, DISEASED, AND/OR BEETLE INFESTED TREES MUST BE REMOVED UPON IMMEDIATE RECEIPT OF WRITTEN OR VERBAL NOTICE TO THE PROPERTY OWNER.
7. DEAD PLANT MATERIAL SHALL BE REMOVED WITHIN (1) MONTH WITH PLANTING MATERIALS THAT MEET THE ORIGINAL INTENT OF THE APPROVED LANDSCAPE DESIGN.
8. NATURAL LANDSCAPE MATERIALS SUCH AS ROCK, STONE, BARK CHIPS AND SHAVINGS WHICH NO LONGER COVER THE AREA IN WHICH THEY WERE ORIGINALLY DEPOSITED SHALL BE REPLENISHED SO THAT THEY AGAIN ACHIEVE FULL COVERAGE TO A MINIMUM DEPTH AS SPECIFIED.

WEED CONTROL

1. IN AREAS THAT HAVE BEEN RE-GRADED AND/OR HAVE EXISTING WEED GROWTH, WEED CONTROL MEASURES APPROPRIATE TO THE AMOUNT OF GROWTH AND/OR SPECIES SHALL BE PROVIDED.
2. THROUGHOUT THE GROWING SEASON WEED CONTROL OF NATIVE AREAS SHALL BE PERFORMED USING A SPOT TREATMENT METHOD.
3. HERBICIDE SHALL BE APPLIED BY A LICENSED APPLICATOR OR UNDER THE DIRECT SUPERVISION OF A LICENSED APPLICATOR.

NATIVE SEED AREAS

1. REFERENCE WEED CONTROL NOTES ABOVE.
2. MOW A MINIMUM OF ONCE YEARLY UPON ESTABLISHMENT OF GRASS.


OZ ARCHITECTURE®
3003 Larimer Street
Denver, Colorado 80205
phone 303.861.5704
www.ozarch.com

NORRIS DESIGN
Planning | Landscape Architecture | Branding
409 Main Street
Suite 207
P.O. Box 2320
Frisco, CO 80443
P 970.368.7068
www.norris-design.com


ONE RIVER RUN
75 HUNKI DORI CT.
KEYSTONE, CO 80435

PROJ. NO. 117033.00
DRAWN: ND/TA
CHECKED: ES/BR
APPROVED:
DATE: 2020/06/25

© OZ ARCHITECTURE

ONE RIVER RUN

ISSUED FOR:
PERMIT SET/FOR CONSTRUCTION

SHEET TITLE:
Landscape Notes

SCALE:
SHEET NUMBER
L-001

# PLANT SCHEDULE

| WATER | SYM. | COMMON NAME | BOTANICAL NAME | NATIVE | SIZE & COND. (UNLESS OTHERWISE NOTED) |
|---|---|---|---|---|---|
| **DECIDUOUS TREES** | | | | | |
| NDT | ANC | QUAKING ASPEN | POPULOUS TREMULOIDES | NTV | 6-8' CLUMP, B&B |
| NDT | ASP | QUAKING ASPEN | POPULOUS TREMULOIDES | NTV | 2.5" CAL., B&B |
| NDT | CAN | CANADA RED CHOKECHERRY | PRUNUS VIRGINIANA 'CANADA RED' | NN | 2" CAL., B&B |
| **EVERGREEN TREES** | | | | | |
| DT | CBS | COLORADO SPRUCE | PICEA PUNGENS | NTV | 8' HT MIN (SPECIMEN) |
| DT | FOX | BRISTLECONE PINE | PINUS ARISTATA | NTV | 6' HT MIN (SPECIMEN) |
| DT | LIP | LIMBER PINE VANDERWOLF | PINUS FLEXILIS 'VANDERWOLF PYRAMID' | NTV | 8' HT MIN (SPECIMEN) |
| **DECIDUOUS SHRUBS- 2'-5' SPREAD** | | | | | |
| NDT | HTW | TWINBERRY HONEYSUCKLE | LONICERA INVOLUCRATA | NN | #5 CONT. |
| NDT | MSB | MOUNTAIN SNOWBERRY | SYMPHORICARPOS OREOPHILUS | NTV | #5 CONT. |
| DT | MSP | MOUNTAIN SPIREA | SPIRAEA SPLENDENS | NTV | #5 CONT. |
| NDT | NAN | NATIVE NINEBARK | PHYSOCARPUS MONOGYNUS | NTV | #5 CONT. |
| **DECIDUOUS SHRUBS- 5'-7' SPREAD** | | | | | |
| NDT | ALS | URAL FALSE SPIREA | SORBARIA SORBIFOLIA | NTV | #5 CONT. |
| NDT | DAW | DWARF ARCTIC WILLOW | SALIX PURPUREA NANA | NTV | #5 CONT. |
| DT | MMA | MOUNTAIN MAHOGANY | CERCOCARPUS MONTANUS | NTV | #5 CONT. |
| DT | RBO | BOULDER RASPBERRY | RUBUS DELICIOSUS | NTV | #5 CONT. |
| DT | WSC | CREEPING WESTERN SAND CHERRY | PRUNUS BESSEYI PAWNEE BUTTES | NTV | #5 CONT. |
| **DECIDUOUS SHRUBS- 7'-9' SPREAD** | | | | | |
| DT | CLI | CANADIAN LILAC | SYRINGA X PRESTONIAE 'DONALD WYMAN' | NTV | #5 CONT. |
| NDT | RBE | RED BERRIED ELDER | SAMBUCUS PUBENS | NTV | #5 CONT. |
| **EVERGREEN SHRUBS** | | | | | |
| NDT | BTM | BIG TUNA MUGO PINE | PINUS MUGO 'BIG TUNA' | NN | #5 CONT. |
| DT | BUF | BUFFALO JUNIPER | JUNIPERUS SABINA 'BUFFALO' | NTV | #5 CONT. |
| DT | MSL | SLOWMOUND MUGO PINE | PINUS MUGO 'SLOWMOUND' | NN | #5 CONT. |
| NDT | MSR | MONTGOMERY SPRUCE | PICEA PUNGENS 'MONTGOMERY' | NTV | #5 CONT. |
| NDT | RSP | DWARF GLOBE GREEN SPRUCE | PICEA PUNGENS 'ROUNDABOUT' | NTV | #5 CONT. |
| **ORNAMENTAL GRASSES** | | | | | |
| DT | BAG | BLONDE AMBITION GRAMA GRASS | BOUTELOUA GRACILIS 'BLONDE AMBITION' | NTV | #1 CONT. |
| DT | BBS | BIG BLUESTEM | ANDROPOGON GERARDII | NTV | #1 CONT. |
| DT | IRG | INDIAN RICE GRASS | ACHNATHERUM HYMENOIDES | NTV | #1 CONT. |
| DT | SBI | SISKIYOU BLUE IDAHO FESCUE | FESTUCA IDAHOENSIS 'SISKIYOU BLUE' | NTV | #1 CONT. |
| DT | THG | TUFTED HAIR GRASS | DESCHAMPSIA CESPITOSA | NTV | #1 CONT. |
| **PERENNIALS** | | | | | |
| DT | AJS | AUTUMN JOY STONECROP | SEDUM 'AUTUMN JOY' | NTV | 4" POT F/15, TYP. |
| NDT | ALA | ALPINE ASTER | ASTER ALPINE 'GOLIATH' | NTV | |
| DT | BBP | BLUE BUCKLE PENSTEMON | PENSTEMON VIRGATUS 'BLUE BUCKLE' | NTV | |
| DT | EVP | EVENING PRIMROSE | OENOTHERA CASEPIRTOSA MARGINATA | NTV | |
| DT | GAF | GAYFEATHER | LIATRIS PUNCTATA | NTV | |
| NDT | ICP | ICELAND POPPY | PAPAVER NUDICAULE | NN | |
| DT | LTC | LITTLE TRUDY CATMINT | NEPETA X LITTLE TRUDY | NTV | |
| DT | PUC | PURPLE CONEFLOWER | ECHINACIEA PURPUREA | NTV | |
| DT | SQS | SILVER QUEEN SAGE | ARTEMISIA LUDOVICIANA 'SILVER QUEEN' | NTV | |
| DT | WHC | WHITE CONEFLOWER | ECHINACEA PURPUREA 'FRAGRANT ANGEL' | NTV | |
| NDT | ZRM | ZING ROSE MAIDEN PINKS | DIANTHUS DELTOIDES 'ZING ROSE' | | |

## ANNUALS

| | |
|---|---|
| AL | ALYSSUM |
| BG | BEGENIA |
| CA | CALIBRACHOA |
| CO | COLEOUS |
| GR | GERANIUMS |
| LB | LOBELIA |
| PT | PETUNIAS |
| SD | SNAP DRAGONS |
| SP | SWEET POTATO VINE |
| VR | VERBENIA |
| ZN | ZINNIAS |

NOTES:
1. PLANT SCHEDULE MEETS THE REQUIREMENTS OF THE RIVER RUN VILLAGE LANDSCAPE DESIGN GUIDELINES.
2. 75% OF ALL EVERGREEN TREES TO BE OVER 8'.
3. 75% OF ALL DECIDUOUS TREES WILL BE LARGER THAN 2" CALIPER.
4. NDT = NOT DROUGHT TOLERANT, DT = DROUGHT TOLERANT, NN = NOT NATIVE, NTV = NATIVE.

# SHORT DRY GRASS SEED MIXTURE

| COMMON NAME | % OF TOTAL | LBS. PER 1000 S.F. |
|---|---|---|
| HARD FESCUE, VNS | 30% | 0.6 LBS. |
| CREEPING RED FESCUE, VNS | 30% | 0.6 LBS. |
| SHEEP FESCUE, MEKLENBERGER | 25% | 0.5 LBS. |
| CANADA BLUEGRASS, RUBENS | 10% | 0.2 LBS. |
| CANBY BLUEGRASS, CANBAR | 5% | 0.1 LBS. |
| | TOTAL 100% | 2.0 LBS. |

- SLOPES OVER 3:1 SHALL BE HAYED AND TACKIFIED OR NETTED
- SPREAD SEED AT A RATE OF 2 LBS PER 1000 SF

# AMENITY SCHEDULE

| ITEM | DESCRIPTION | MANUFACTURER | SIZE / DIMENSIONS | PRODUCT NAME | COLOR / FINISH | NOTES |
|---|---|---|---|---|---|---|
| 1 | PLANTER POT | PLANTERS UNLIMITED 800.896.0978 | SIZES: 30"X30"X30" SQUARE, 60"X24"X24" RECTANGLE AND 84"X18"X24" RECTANGLE | MODERN FIBERGLASS COMMERCIAL PLANTER | BLACK, MATTE | INSTALL PER MANUFACTURER'S SPECIFICATIONS, ALL PLANTERS TO BE IRRIGATED BY BLADDER AND FITTED WITH DRAIN HOLES, SEE DETAIL 2, SHEET L-502 |
| 2 | STONE BENCH | SILOAM STONE INC. 719.275.4275 | 6' L X 2' W X 2.5' H | SILOAM STONE | NATURAL | INSTALL PER DETAIL 3, SHEET L-502 |
| 3 | CABANA | TUUCI 305.634.5116 | SQUARE 10'X10' | EQUINOX CABANA, COLUMN CONNECTION TO BE POST INSTALLED TO STRUCTURAL SLAB | ALUMA-TEAK IN JAVA | INSTALL PER MANUFACTURER'S SPECIFICATIONS, CONSULT STRUCTURAL FOR SURFACE MOUNTING OVER STRUCTURE, INCLUDE SIDE FABRIC CURTAINS (NATURAL), POWER/USB OUTLET AND LED DOWN LIGHTING |
| 4 | 72" RECTANGULAR FIRE PIT | LUMACAST 760.834.1567 | 72"X32" | BLOC | CHARCOAL WITH BOARDFORM FINISH | INSTALL PER MANUFACTURER'S SPECIFICATIONS, 125,000 BTUs, AUTOMATIC TIMER AND SHUT OFF VALVE EACH, INSTALL WITH GLASS WIND GUARD AND WHITE BASALT INFILL |
| 5 | 82" RECTANGULAR FIRE PIT | LUMACAST 760.834.1567 | 82"X32" | BLOC | CHARCOAL WITH BOARDFORM FINISH | INSTALL PER MANUFACTURER'S SPECIFICATIONS, 150,000 BTUs, AUTOMATIC TIMER AND SHUT OFF VALVE EACH, INSTALL WITH GLASS WIND GUARD AND WHITE BASALT INFILL |
| 6 | 48" SQUARE FIRE PIT | LUMACAST 760.834.1567 | 48"X48" | BLOC2 | CHARCOAL WITH BOARDFORM FINISH | INSTALL PER MANUFACTURER'S SPECIFICATIONS, 120,000 BTUs, AUTOMATIC TIMER AND SHUT OFF VALVE EACH, INSTALL WITH GLASS WIND GUARD AND WHITE BASALT INFILL |
| 7 | TRASH AND RECYCLING RECEPTACLE | BEAR SAVER 800.851.3887 | 44" W X 46" H X 24" L | HA SERIES DOUBLE COMBO HA2-PX TRASH/RECYCLING | BLACK WITH TRASH AND RECYCLING LABELS | INSTALL PER MANUFACTURER'S SPECIFICATIONS, RECEPTACLES TO BE SURFACE MOUNTED |
| 8 | PLANTER POT RESERVOIR | PLANTERS UNLIMITED 800.896.0978 | SIZES: 24"L X 24"W X 3"H SQUARE, 25"L X 9"W X 3"H RECTANGLE | PLANTER RESERVOIR | STANDARD BLACK | INSTALL PER MANUFACTURER'S SPECIFICATIONS, ONLY ONE RESERVOIR REQUIRED FOR SQUARE POTS, TWO RESERVOIR WITH CONNECTORS ARE REQUIRED FOR ALL RECTANGULAR POTS, SEE DETAIL 2, SHEET L-502 |

# MATERIAL SCHEDULE (CONTRACTOR TO SUBMIT SAMPLES FOR ALL ITEMS IN MATERIAL SCHEDULE FOR OWNER / ARCHITECT REVIEW AND APPROVAL.)

| ITEM | DESCRIPTION | MANUFACTURER | SIZE / DIMENSIONS | PRODUCT NAME | COLOR / FINISH | NOTES |
|---|---|---|---|---|---|---|
| A | CONCRETE FLATWORK | N/A | REFER TO PLANS, THICKNESS PER CIVIL ENGINEER | STANDARD GRAY CONCRETE | STANDARD GRAY, LIGHT BROOM FINISH | REFER TO COUNTY SPECIFICATIONS FOR CONCRETE MIX AND CONSTRUCTION, REFER TO CIVIL FOR DEPTH |
| B | PLAZA PAVERS | KEYSTONE HARDSCAPES 303.525.3428 | STANDARD: 3.94"W X 3.15"H X 7.87"L | STANDARD: HOLLAND 80MM | BUFF/CHARCOAL, RUNNING BOND | INSTALL AND COMPACT PAVERS PER MANUFACTURER'S SPECIFICATIONS, SEE DETAIL 1 ON SHEET L-503 |
| C | ENHANCED PAVERS 1 | KEYSTONE HARDSCAPES 303.525.3428 | 9"W X 3.15"H X 18"L | VERONA 9X18 80MM | CHARCOAL OBSIDIAN QUARTEX, RUNNING BOND | INSTALL AND COMPACT PAVERS PER MANUFACTURER'S SPECIFICATIONS, SEE DETAIL 2 ON SHEET L-503 |
| D | ASPHALT | N/A | REFER TO PLANS, THICKNESS PER CIVIL ENGINEER | N/A | STANDARD ASPHALT FINISH | REFER TO CIVIL PLANS FOR ASPHALT THICKNESS AND INSTALLATION DETAILS |
| E | COURTYARD PAVERS | KEYSTONE HARDSCAPES 303.525.3428 | WIDTH AND LENGTH VARY, 2.36" HEIGHT | PANORAMA DEMI AND SUPRA 60MM | EDDINGTON BLEND, ASHLAR PATTERN | INSTALL AND COMPACT PAVERS PER MANUFACTURER'S SPECIFICATIONS FOR OVER STRUCTURE, SEE DETAIL 4 ON SHEET L-503 |
| F | PAVER RESTRAINT RAIL EDGER | ALLIANCE 450.624.1661 | SEE PLANS | GATOR EDGE | BLACK | INSTALL PER MANUFACTURER'S SPECIFICATIONS, SEE DETAIL 4 ON SHEET L-501, REQUIRED EVERYWHERE PAVERS ARE NOT ADJACENT TO CONCRETE OR ASPHALT PAVING, BUILDING FACADE OR RETAINING WALL |
| G | POOL DETAIL TILE | NATIONAL POOL TILE 303.629.7665 | 1" SQUARE FOR BAJA SHELF AND 12" L FOR WATERLINE TILE | AQUASCAPES TILE | AQUAMARINE SQUARE AND AZURE INTERLOCKING 12" TILE | INSTALL PER MANUFACTURER'S SPECIFICATIONS |
| H | POOL AND SPA FINISH TILE | NATIONAL POOL TILE 303.629.7665 | 2" SQUARE FOR INTERIOR OF POOL AND SPA | UNGLAZED TILE | WHITE | INSTALL PER MANUFACTURER'S SPECIFICATIONS |
| I | SPA COPING | NATIONAL POOL TILE 303.629.7665 | 12" W X 24" L X 2.5" D | PRECAST COPING, DBN PROFILE | COLOR 2011 | INSTALL PER MANUFACTURER'S SPECIFICATIONS |
| J | SPA DETAIL TILE | NATIONAL POOL TILE 303.629.7665 | 6"X36" | TULIP WOOD | BLUE | INSTALL PER MANUFACTURER'S SPECIFICATIONS |
| K | ARTIFICIAL TURF | FOREVER LAWN 866.992.7876 | SEE PLANS | DUPONT SELECT HD SYNTHETIC TURF | GREEN | INSTALL PER MANUFACTURER'S SPECIFICATIONS, SEE DETAIL 5, SHEET L-503 |
| L | RIVER ROCK COBBLE | PIONEER SAND | 2"-6" COBBLE | BLUE MOUNTAIN RIVER ROCK COBBLE | BLUE/MIX | SEE DETAIL 1, SHEET L-504 FOR COBBLE SWALE, INSTALL COBBLE IN 2.5' BAND AROUND BUILDING IN LANDSCAPE BEDS WITHIN "NO PLANT ZONE," SEE DETAILS 6 AND 7, SHEET L-502 |
| M | PLANTER MULCH | PIONEER SAND | INTERIOR OF POTS AND COURTYARD PLANTERS, SEE PLANS | MINI BARK PEBBLE MULCH | NATURAL | INSTALL 2" DEPTH, INSTALL OVER WEED CONTROL FABRIC FOR COURTYARD PLANTERS |
| N | PLANTING BED MULCH | PIONEER SAND | SEE PLANS | WASHINGTON CEDAR SHREDDED MULCH | NATURAL | INSTALL AT A MINIMUM 3" DEPTH OVER WEED CONTROL FABRIC |
| O | BOULDERS | SILOAM STONE INC. 719.275.4275 | MIX OF 1'-4' DIAMETER | CINNAMON SHADOW QUARRY BOULDERS | NATURAL | SEE DETAIL 6 ON SHEET L-501 |
| P | BENDA BOARD EDGER | EPIC PLASTICS 209.333.6161 | SEE PLANS | BENDA BOARD EDGER | SAND | INSTALL PER MANUFACTURER'S SPECIFICATIONS, SEE DETAIL 4, SHEET L-502 |
| Q | CRUSHER FINES | PIONEER SAND | SEE PLANS | GRAY BREEZE CRUSHER FINES | GRAY | SEE DETAIL 5 ON SHEET L-502 |
| R | STEPPING STONES | PIONEER SAND | 2" DEPTH, RANDOM FLAGSTONE, SEE PLANS | BUFF FLAGSTONE | BUFF | SEE DETAIL 4 ON SHEET L-502 |

NOTES:
1. THE MANUFACTURERS AND PRODUCTS LISTED ABOVE ARE THE BASIS OF DESIGN FOR THIS PROJECT. IF A SUBSTITUTION IS SUGGESTED FOR ANY OF THE ABOVE MANUFACTURER DESCRIBED PRODUCTS, THOSE SUBSTITUTIONS WILL NEED TO SUBMITTED FOR REVIEW AND ACCEPTED BEFORE ORDERING AND INSTALLATION COMMENCES.
2. DESIGN AND CONSTRUCTION DETAILS FOR POOL AND SPAS PROVIDED BY POOL CONSULTANT. FINISHES FOR POOL PROVIDED IN ABOVE MATERIAL SCHEDULE.


OZ ARCHITECTURE
3003 Larimer Street
Denver, Colorado 80205
phone 303.861.5704
www.ozarch.com

NORRIS DESIGN
Planning | Landscape Architecture | Branding
409 Main Street
Suite 207
P.O. Box 2320
Frisco, CO 80443
P 970.368.7068
www.norris-design.com


ONE RIVER RUN
75 HUNKI DORI CT.
KEYSTONE, CO 80435

PROJ. NO. 117033.00
DRAWN: ND/TA
CHECKED: ES/BR
APPROVED:
DATE: 2020/06/25

© OZ ARCHITECTURE

ONE RIVER RUN

ISSUED FOR:
PERMIT SET/FOR CONSTRUCTION

SHEET TITLE:
Landscape Schedules

SCALE:
SHEET NUMBER
L-002

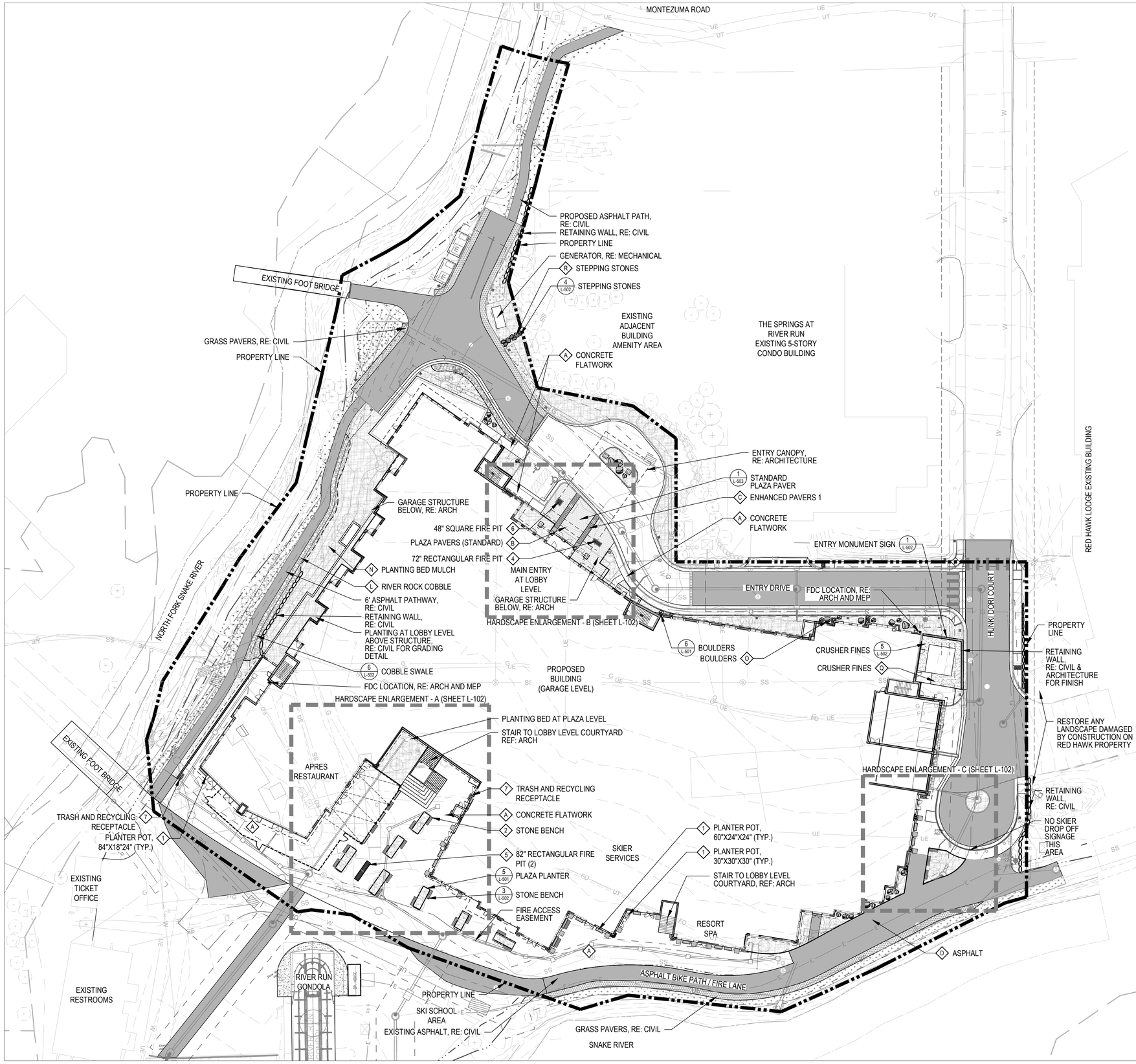


## LEGEND

- BOULDERS (MATERIAL SCHEDULE O, L-002 & DETAIL 6, L-501)
- STONE BENCH (AMENITY SCHEDULE 2, L-002 & DETAIL 3, L-502)
- TRASH AND RECYCLING RECEPTACLE (AMENITY SCHEDULE 7, L-002)
- PLANTER POT, 30"X30"X30" SQUARE (AMENITY SCHEDULE 1, L-002 & DETAIL 2, L-502)
- PLANTER POT, 60"X24"X24" RECTANGLE (AMENITY SCHEDULE 1, L-002 & DETAIL 2, L-502)
- PLANTER POT, 84"X18"X24" RECTANGLE (AMENITY SCHEDULE 1, L-002 & DETAIL 2, L-502)
- 72" RECTANGULAR FIRE PIT (AMENITY SCHEDULE 4, L-002)
- 82" RECTANGULAR FIRE PIT (AMENITY SCHEDULE 5, L-002)
- 62" SQUARE FIRE PIT (AMENITY SCHEDULE 6, L-002)
- PROPERTY LINE
- RESTAURANT FENCE AND GATE (RE: ARCHITECTURE)
- SPADE CUT EDGER (DETAIL 7, L-501)
- STRING LIGHTING (RE: LIGHTING AND ELECTRICAL)
- SHORT DRY GRASS SEED MIXTURE, FOR RE-SEED OR MATCH EXISTING GROUND TREATMENT
- PLANTING BED (MATERIAL SCHEDULE N, L-002)
- PLAZA PAVERS (MATERIAL SCHEDULE B, L-002)
- ENHANCED PAVERS 1 (MATERIAL SCHEDULE C, L-002)
- CONCRETE FLATWORK (MATERIAL SCHEDULE A, L-002)
- ASPHALT (MATERIAL SCHEDULE D, L-002, RE: CIVIL)
- GRASS PAVERS, RE: CIVIL, SEED WITH SPECIFIED SHORT DRY GRASS SEED MIXTURE
- RIVER ROCK COBBLE (MATERIAL SCHEDULE L, L-002)
- CRUSHER FINES (MATERIAL SCHEDULE Q, L-002 & DETAIL 5, SHEET L-502)
- SNOW STORAGE AREA, RE: CIVIL


OZ ARCHITECTURE
3003 Larimer Street
Denver, Colorado 80205
phone 303.861.5704
www.ozarch.com

NORRIS DESIGN
Planning | Landscape Architecture | Branding
409 Main Street
Suite 207
P.O. Box 2320
Frisco, CO 80443
P 970.368.7068
www.norris-design.com


# ONE RIVER RUN
## 75 HUNKI DORI CT.
## KEYSTONE, CO 80435

PROJ. NO. 117033.00
DRAWN: ND/TA
CHECKED: ES/BR
APPROVED:
DATE: 2020/06/25

© OZ ARCHITECTURE

ONE RIVER RUN

ISSUED FOR:
PERMIT SET/FOR CONSTRUCTION

SHEET TITLE:
Hardscape Layout Plan: Plaza Level

SCALE:
SHEET NUMBER

L-101

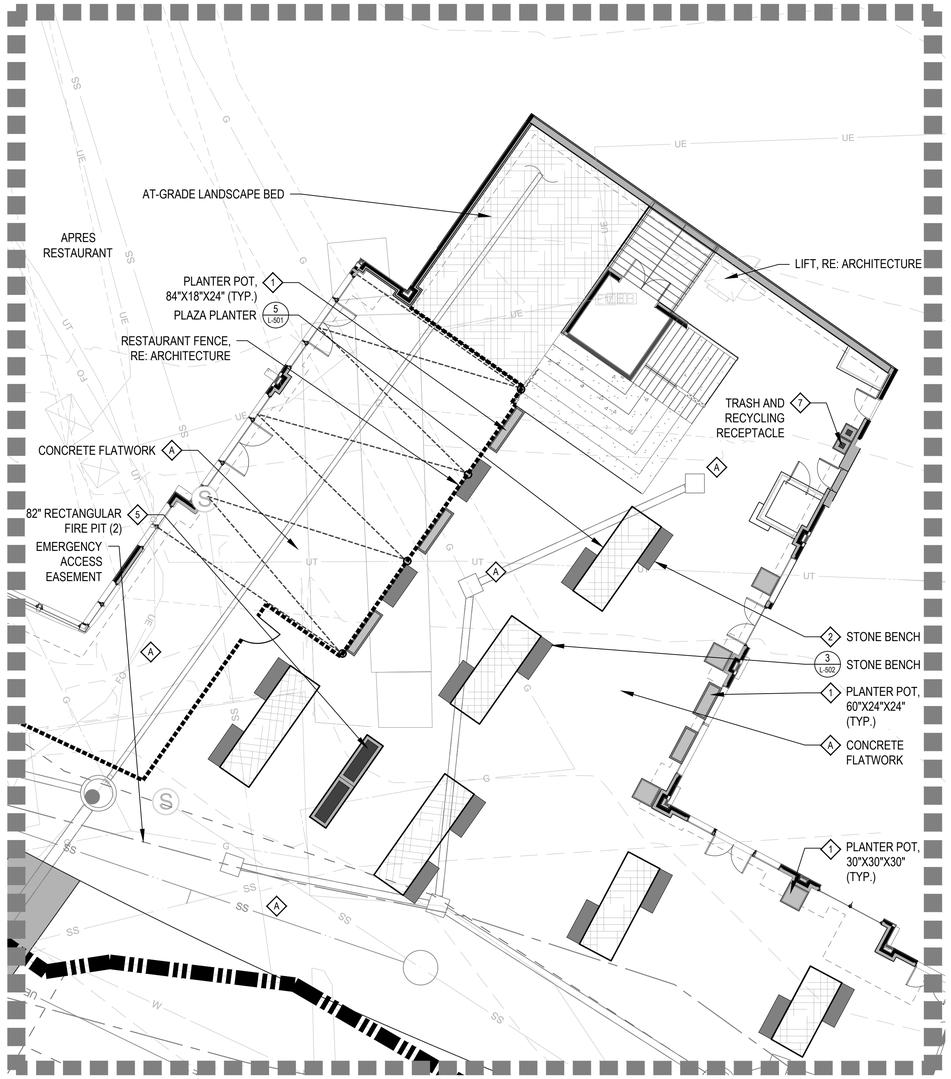


HARDSCAPE ENLARGEMENT - A

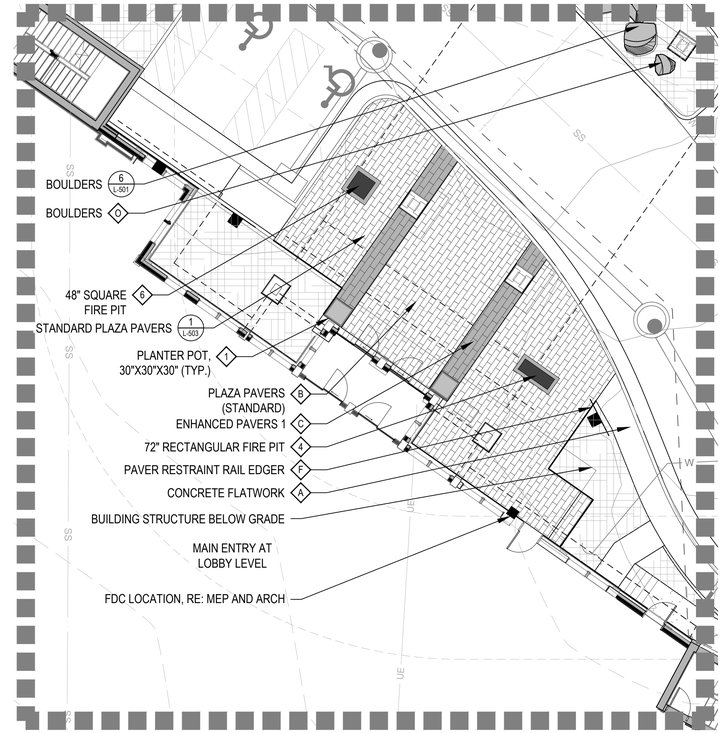


HARDSCAPE ENLARGEMENT - B

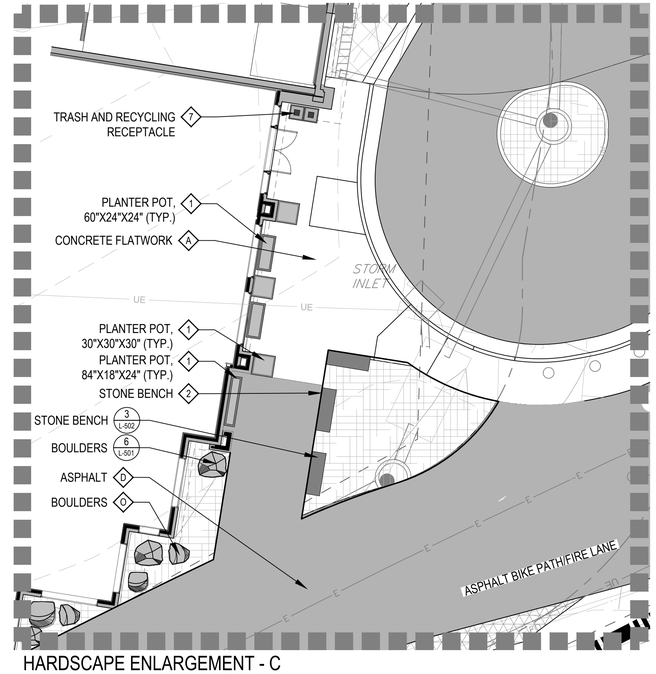


HARDSCAPE ENLARGEMENT - C

## LEGEND

- BOULDERS (MATERIAL SCHEDULE O, L-002 & DETAIL 6, L-501)
- STONE BENCH (AMENITY SCHEDULE 2, L-002 & DETAIL 3, L-502)
- TRASH AND RECYCLING RECEPTACLE (AMENITY SCHEDULE 7, L-002)
- PLANTER POT, 30"X30"X30" SQUARE (AMENITY SCHEDULE 1, L-002 & DETAIL 2, L-502)
- PLANTER POT, 60"X24"X24" RECTANGLE (AMENITY SCHEDULE 1, L-002 & DETAIL 2, L-502)
- PLANTER POT, 84"X18"X24" RECTANGLE (AMENITY SCHEDULE 1, L-002 & DETAIL 2, L-502)
- 72" RECTANGULAR FIRE PIT (AMENITY SCHEDULE 4, L-002)
- 82" RECTANGULAR FIRE PIT (AMENITY SCHEDULE 5, L-002)
- 62" SQUARE FIRE PIT (AMENITY SCHEDULE 6, L-002)
- PROPERTY LINE
- RESTAURANT FENCE AND GATE (RE: ARCHITECTURE)
- SPADE CUT EDGER (DETAIL 7, L-501)
- STRING LIGHTING (RE: LIGHTING AND ELECTRICAL)
- PLANTING BED (MATERIAL SCHEDULE N, L-002)
- PLAZA PAVERS (MATERIAL SCHEDULE B & C, L-002)
- ENHANCED PAVERS 1 (MATERIAL SCHEDULE C, L-002)
- CONCRETE FLATWORK (MATERIAL SCHEDULE A, L-002)
- GRASS PAVERS, RE: CIVIL, SEED WITH SPECIFIED SHORT DRY GRASS SEED MIXTURE
- ASPHALT (MATERIAL SCHEDULE D, L-002, RE: CIVIL)

NORTH

0 5' 10' 20'
SCALE: 1"= 10'


OZ ARCHITECTURE
3003 Larimer Street
Denver, Colorado 80205
phone 303.861.5704
www.ozarch.com

NORRIS DESIGN
Planning | Landscape Architecture | Branding
409 Main Street
Suite 207
P.O. Box 2320
Frisco, CO 80443
P 970.368.7068
www.norris-design.com


# ONE RIVER RUN
75 HUNKI DORI CT.
KEYSTONE, CO 80435

PROJ. NO. 117033.00
DRAWN: ND/TA
CHECKED: ES/BR
APPROVED:
DATE: 2020/06/25

© OZ ARCHITECTURE

ONE RIVER RUN

ISSUED FOR:
PERMIT SET/FOR CONSTRUCTION

SHEET TITLE:
Hardscape Enlargement Plans: Plaza Level

SCALE:
SHEET NUMBER
L-102

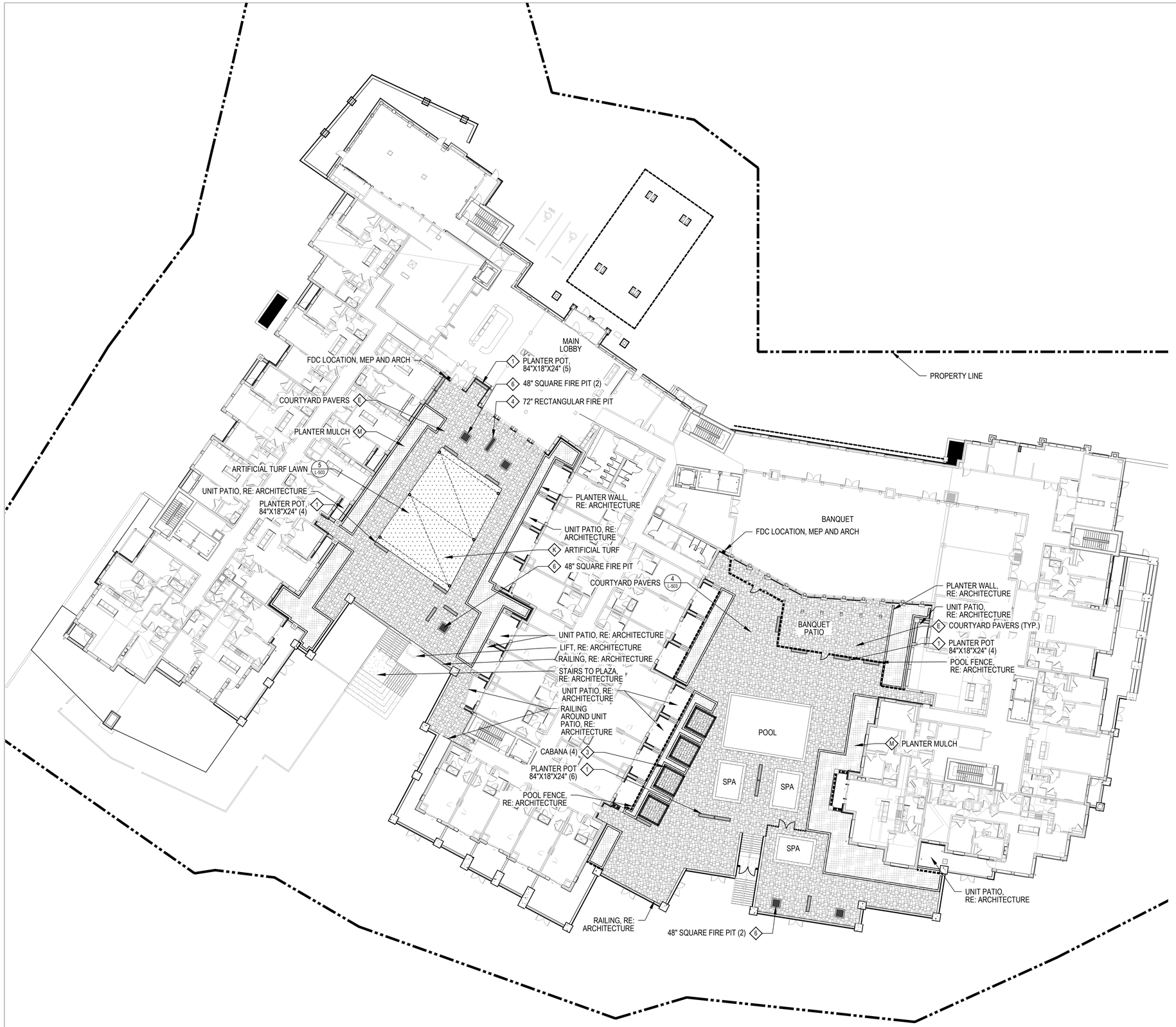


## LEGEND

- PLANTER POTS, 84"X18"X24" (AMENITY SCHEDULE 1, L-002)
- 62" SQUARE FIRE PIT (AMENITY SCHEDULE 6, L-002)
- 72" RECTANGULAR FIRE PIT (AMENITY SCHEDULE 4, L-002)
- PROPERTY LINE
- POOL FENCE, RE: ARCHITECTURE
- CLUB FENCE, RE: ARCHITECTURE
- STRING LIGHTING (RE: LIGHTING AND ELECTRICAL)
- COURTYARD PLANTER WALL (RE: ARCHITECTURE)
- CABANA (AMENITY SCHEDULE 3, L-002)
- ARTIFICIAL TURF (MATERIAL SCHEDULE K, L-002)
- PLANTING BED (MATERIAL SCHEDULE M, L-002)
- COURTYARD PAVERS (MATERIAL SCHEDULE E, SHEET L-002)


OZ ARCHITECTURE
3003 Larimer Street
Denver, Colorado 80205
phone 303.861.5704
www.ozarch.com

NORRIS DESIGN
Planning | Landscape Architecture | Branding
409 Main Street
Suite 207
P.O. Box 2320
Frisco, CO 80443
P 970.368.7068
www.norris-design.com


# ONE RIVER RUN
## 75 HUNKI DORI CT.
## KEYSTONE, CO 80435

PROJ. NO. 117033.00
DRAWN: ND/TA
CHECKED: ES/BR
APPROVED:
DATE: 2020/06/25

811

© OZ ARCHITECTURE

ONE RIVER RUN

ISSUED FOR:
PERMIT SET/FOR CONSTRUCTION

SHEET TITLE:
Hardscape Layout Plan: Lobby Level

SCALE:
SHEET NUMBER

L-201

## LEGEND

- EXISTING TREES TO REMAIN
- EVERGREEN TREES (DETAIL 1, L-501)
- DECIDUOUS TREES (DETAIL 1, L-501)
- DECIDUOUS SHRUBS (DETAIL 2, L-501)
- EVERGREEN SHRUBS (DETAIL 2, L-501)
- ORNAMENTAL GRASSES (DETAIL 3, L-501)
- BOULDERS (MATERIAL SCHEDULE O, L-002 & DETAIL 6, L-501)
- STONE BENCH (AMENITY SCHEDULE 2, L-002 & DETAIL 3, L-502)
- TRASH AND RECYCLING RECEPTACLE (AMENITY SCHEDULE 7, L-002)
- PLANTER POTS (AMENITY SCHEDULE 1, L-002 & DETAIL 2, L-502)
- PROPERTY LINE
- RESTAURANT FENCE AND GATE (RE: ARCHITECTURE)
- SPADE CUT EDGER (DETAIL 7, L-501)
- STRING LIGHTING (RE: LIGHTING AND ELECTRICAL)
- SHORT DRY GRASS SEED MIXTURE, FOR RE-SEED OR MATCH EXISTING GROUND TREATMENT
- ANNUALS
- SNOW STORAGE, RE: CIVIL
- GRASS PAVERS, RE: CIVIL, SEED WITH SPECIFIED SHORT DRY GRASS SEED MIXTURE

NORTH

0 10' 20' 40'
SCALE: 1"= 20'

OZ ARCHITECTURE
3003 Larimer Street
Denver, Colorado 80205
phone 303.861.5704
www.ozarch.com

NORRIS DESIGN
Planning | Landscape Architecture | Branding
409 Main Street
Suite 207
P.O. Box 2320
Frisco, CO 80443
P 970.368.7068
www.norris-design.com

# ONE RIVER RUN
75 HUNKI DORI CT.
KEYSTONE, CO 80435

PROJ. NO. 117033.00
DRAWN: ND/TA
CHECKED: ES/BR
APPROVED:
DATE: 2020/06/25

811

© OZ ARCHITECTURE

ONE RIVER RUN

ISSUED FOR:
PERMIT SET/FOR CONSTRUCTION

SHEET TITLE:
Landscape Planting Plan: Plaza Level West

SCALE:
SHEET NUMBER
L-301

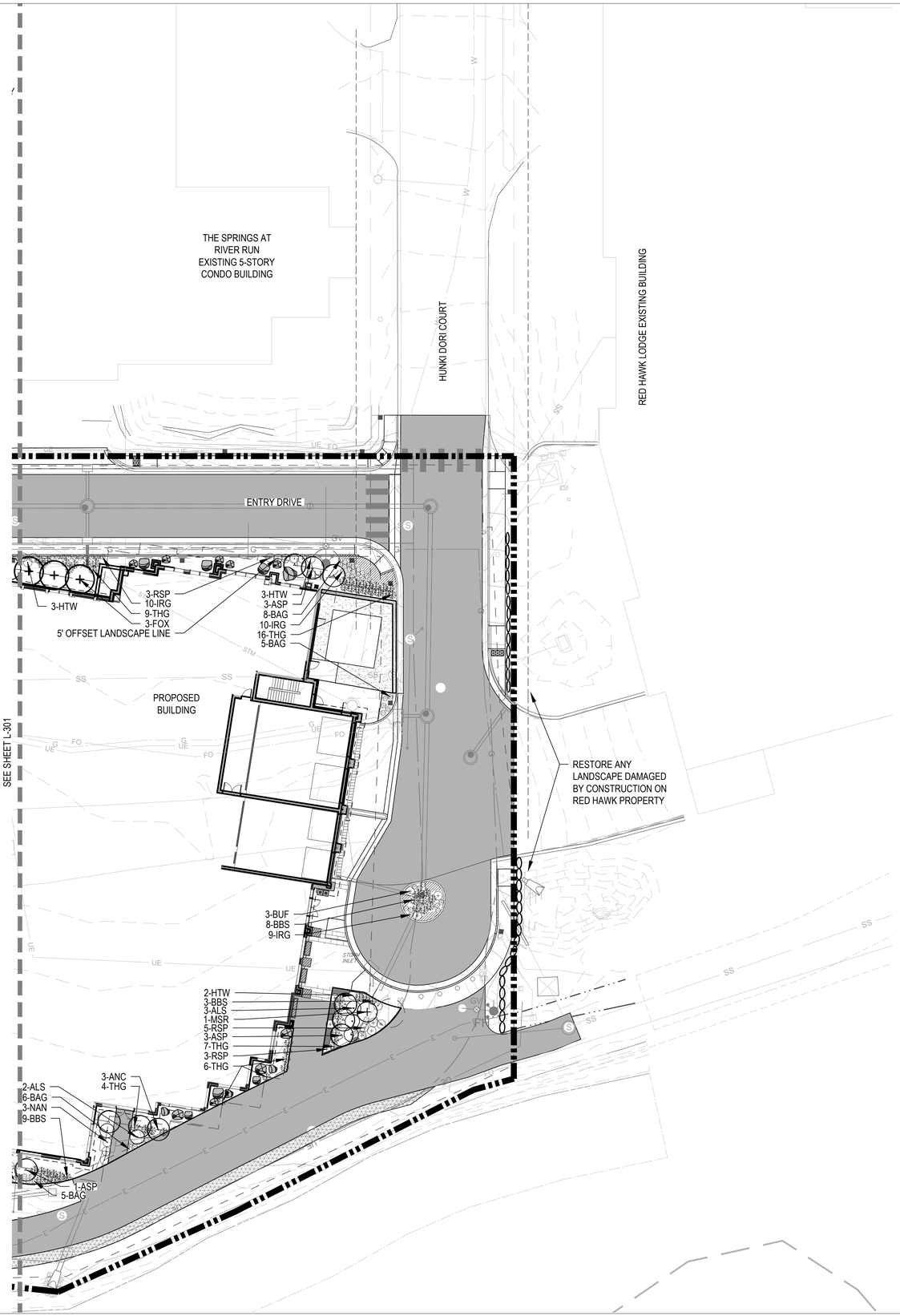


## LEGEND

- EXISTING TREES TO REMAIN
- EVERGREEN TREES (DETAIL 1, L-501)
- DECIDUOUS TREES (DETAIL 1, L-501)
- DECIDUOUS SHRUBS (DETAIL 2, L-501)
- EVERGREEN SHRUBS (DETAIL 2, L-501)
- ORNAMENTAL GRASSES (DETAIL 3, L-501)
- BOULDERS (MATERIAL SCHEDULE O, L-002 & DETAIL 6, L-501)
- STONE BENCH (AMENITY SCHEDULE 2, L-002 & DETAIL 3, L-502)
- TRASH AND RECYCLING RECEPTACLE (AMENITY SCHEDULE 7, L-002)
- PLANTER POTS (AMENITY SCHEDULE 1, L-002 & DETAIL 2, L-502)
- PROPERTY LINE
- RESTAURANT FENCE AND GATE (RE: ARCHITECTURE)
- SPADE CUT EDGER (DETAIL 7, L-501)
- STRING LIGHTING (RE: LIGHTING AND ELECTRICAL)
- SHORT DRY GRASS SEED MIXTURE, FOR RE-SEED OR MATCH EXISTING GROUND TREATMENT
- ANNUALS
- SNOW STORAGE, RE: CIVIL
- GRASS PAVERS, RE: CIVIL, SEED WITH SPECIFIED SHORT DRY GRASS SEED MIXTURE

NORTH

0 10' 20' 40'
SCALE: 1"= 20'

OZ ARCHITECTURE
3003 Larimer Street
Denver, Colorado 80205
phone 303.861.5704
www.ozarch.com

NORRIS DESIGN
Planning | Landscape Architecture | Branding
409 Main Street
Suite 207
P.O. Box 2320
Frisco, CO 80443
P 970.368.7068
www.norris-design.com

# ONE RIVER RUN
75 HUNKI DORI CT.
KEYSTONE, CO 80435

PROJ. NO. 117033.00
DRAWN: ND/TA
CHECKED: ES/BR
APPROVED:
DATE: 2020/06/25

811

© OZ ARCHITECTURE

ONE RIVER RUN

ISSUED FOR:
PERMIT SET/FOR CONSTRUCTION

SHEET TITLE:
Landscape Planting Plan: Plaza Level East

SCALE:
SHEET NUMBER
L-302

## LEGEND

- DECIDUOUS SHRUBS (DETAIL 2, L501)
- EVERGREEN SHRUBS (DETAIL 2, L501)
- ORNAMENTAL GRASSES (DETAIL 3, L501)
- PERENNIALS (DETAIL 3, L501)
- PLANTER POTS (AMENITY SCHEDULE 1, L002)
- PROPERTY LINE
- STRING LIGHTING (RE: LIGHTING AND ELECTRICAL)
- COURTYARD PLANTER WALL, RE: ARCHITECTURE
- ARTIFICIAL TURF (MATERIAL SCHEDULE K, L002)
- ANNUALS

NORTH

0 10' 20' 40'

SCALE: 1"= 20'

OZ ARCHITECTURE
3003 Larimer Street
Denver, Colorado 80205
phone 303.861.5704
www.ozarch.com

NORRIS DESIGN
Planning | Landscape Architecture | Branding
409 Main Street
Suite 207
P.O. Box 2320
Frisco, CO 80443
P 970.368.7068
www.norris-design.com

# ONE RIVER RUN

75 HUNKI DORI CT.
KEYSTONE, CO 80435

PROJ. NO. 117033.00
DRAWN: ND/TA
CHECKED: ES/BR
APPROVED:
DATE: 2020/06/25

811

© OZ ARCHITECTURE

ONE RIVER RUN

ISSUED FOR:
PERMIT SET/FOR CONSTRUCTION

SHEET TITLE:
Landscape Planting Plan: Lobby Level

SCALE:

SHEET NUMBER

L-401

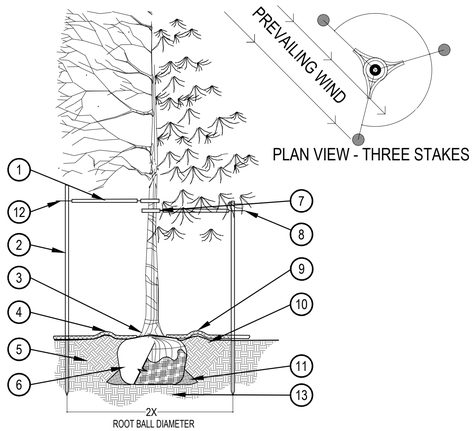


PRUNING NOTES:
1. ALL PRUNING SHALL COMPLY WITH ANSI A300 STANDARDS.
2. DO NOT HEAVILY PRUNE THE TREE AT PLANTING. PRUNE ONLY CROSSOVER LIMBS, CO-DOMINANT LEADERS AND BROKEN BRANCHES. SOME INTERIOR TWIGS AND LATERAL BRANCHES MAY BE PRUNED. HOWEVER, DO NOT REMOVE THE TERMINAL BUDS OF BRANCHES THAT EXTEND TO THE EDGE OF THE CROWN.

STAKING NOTES:
1. STAKE TREES PER DIAGRAM. AFTER A MINIMUM OF 2 YEARS CONFIRM TREE IS ESTABLISHED. CHECK FOR ROOTBALL STABILITY. APPLY HAND PRESSURE TO TRUCK OF TREE, WHEN ROOTBALL DOES NOT MOVE, REMOVE STAKING.
2. WIRE OR CABLE SHALL BE MIN. 12 GAUGE, TIGHTEN WIRE OR CABLE ONLY ENOUGH TO KEEP FROM SLIPPING. ALLOW FOR SOME TRUNK MOVEMENT. NYLON STRAPS SHALL BE LONG ENOUGH TO ACCOMMODATE 1-$\frac{1}{2}$" OF GROWTH AND BUFFER ALL BRANCHES FROM WIRE.
3. ADJUST STAKING, STRAPS AND GUY WIRES ANNUALLY.

1. PLACE MINIMUM 1/2" PVC PIPE AROUND EACH WIRE, EXPOSED WIRE SHALL BE MAXIMUM 2" EACH SIDE
2. 6'-0"UNTREATED WOOD POST, MINIMUM 1.5" DIAMETER, ALL SHALL BE DRIVEN OUTSIDE ROOTBALL AND IN UNDISTURBED SOIL
3. PLANT TREE SO THAT FIRST ORDER MAJOR ROOT IS 1"-2" ABOVE FINAL GRADE.
4. 3" DEEP MULCH RING PLACED A MINIMUM OF 4 FT. IN DIAMETER ON TOP OF WEED FABRIC. DO NOT PLACE MULCH IN CONTACT WITH TREE TRUNK (FINISHED GRADE REFERENCES TOP OF MULCH).
5. 1:1 SLOPE ON SIDES OF PLANTING HOLE.
6. REMOVE ALL TWINE, ROPE, BURLAP AND WIRE FROM ROOTBALL AND TRUNK
7. GROMMETED NYLON STRAPS
8. 4-6" HIGH WATER SAUCER IN NON-TURF AREAS.
9. BACKFILL WITH PLANT MIX. PLANT MIX SHALL CONSIST OF EQUAL PARTS TOPSOIL, COMPOST, AND EXCAVATED SOIL. WATER THOROUGHLY WHEN BACKFILLING
10. BACKFILL WITH BLEND OF EXISTING SOIL AND A MAXIMUM 20%, BY VOLUME, ORGANIC MATERIAL, WATER THOROUGHLY WHEN BACKFILLING
11. PLACE SOIL AROUND ROOT BALL FIRMLY, DO NOT COMPACT OR TAMP, SETTLE SOIL WITH WATER TO FILL ALL AIR POCKETS
12. GALVANIZED WIRE, MINIMUM 12 GAUGE CABLE,TWIST WIRE ONLY TO KEEP FROM SLIPPING
13. PLACE ROOT BALL ON UNDISTURBED SOIL TO PREVENT SETTLEMENT

## 1 TREE PLANTING

SCALE: 3/16" = 1'-0"

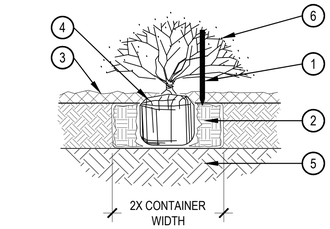


NOTE:
1. BROKEN OR CRUMBLING ROOT-BALLS WILL BE REJECTED
2. CARE SHOULD BE TAKEN NOT TO DAMAGE THE SHRUB OR ROOT-BALL WHEN REMOVING IT FROM ITS CONTAINER
3. ALL JUNIPERS SHOULD BE PLANTED SO THE TOP OF THE ROOT-BALL OCCURS ABOVE THE FINISH GRADE OF THE MULCH LAYER
4. DIG PLANT PIT TWICE AS WIDE AND HIGH AS THE CONTAINER

1. 2'-6" WOODEN STAKE DRIVEN INTO THE GROUND NEXT TO ROOTBALL REQUIRED WHEN SHRUBS ARE LOCATED IN NATIVE SEED, 18" OF THE STAKE MUST BE VISIBLE
2. BACKFILL WITH PLANT MIX. PLANT MIX SHALL CONSIST OF EQUAL PARTS TOPSOIL, COMPOST, AND EXCAVATED SOIL, TILL SOIL AMENDMENT TO A DEPTH OF 8", WATER THOROUGHLY WHEN BACKFILLING
3. FINISH GRADE (TOP OF NATIVE SEED OR LANDSCAPE BED)
4. SET SHRUB ROOTBALL 1" HIGHER THAN FINISH GRADE
5. UNDISTURBED GRADE
6. PRUNE ALL DEAD OR DAMAGED WOOD PRIOR TO PLANTING

## 2 SHRUB PLANTING

SCALE: 1-1/2" = 1'-0"

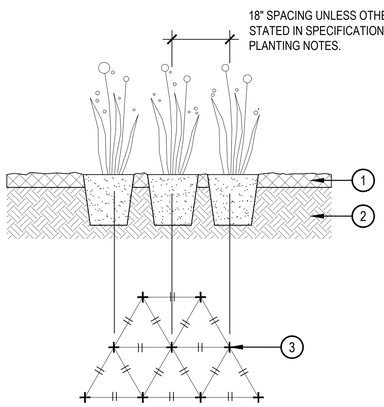


1. SPECIFIED MULCH
2. AMENDED PLANTING BED FILLED TO A DEPTH OF 8", BACKFILL WITH 33% ORGANIC MATTER, 33% SAWDUST AND 33% SCREENED TOPSOIL
3. CENTER OF PLANT

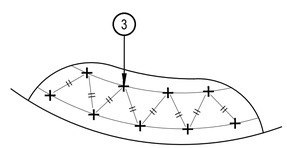


WHEN PLANTED ON A CURVE ORIENT ROWS TO FOLLOW THE LONG AXIS OF AREAS WHERE PLANTS ARE MASSED.

## 3 PERENNIAL AND ORNAMENTAL GRASS PLANT LAYOUT

SCALE: 1" = 1'-0"

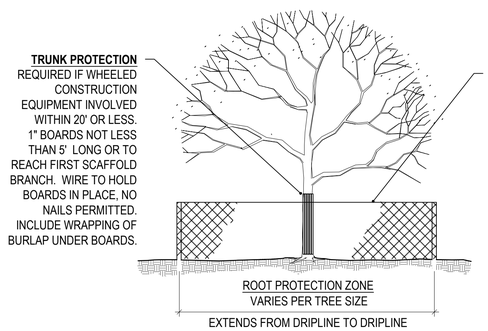


PLACE SIGNS:

KEEP OUT
TREE PROTECTION
AREA

EVERY 50' ATTACHED TO FENCING

**TREE PROTECTION NOTES**
1. ALL TREES AND SHRUBS TO BE PROTECTED AND PRESERVED SHALL BE PER DETAIL. GROUPING OF MORE THAN ONE TREE MAY OCCUR.
2. TREES AND SHRUBS TO BE PROTECTED AND PRESERVED SHALL BE IDENTIFIED ON THE TRUNK WITH SURVEY TAPE.
3. TO PREVENT ROOT SMOTHERING, SOIL STOCKPILES, SUPPLIES, EQUIPMENT OR ANY OTHER MATERIAL SHALL NOT BE PLACED OR STORED WITHIN THE DRIP LINE OR WITHIN 10 FEET OF A TREE OR SHRUB TRUNK, WHICHEVER IS GREATER.
4. TREE AND SHRUB ROOTS SHALL NOT BE CUT UNLESS CUTTING IS UNAVOIDABLE.
5. TRENCHES SHALL BE HAND DUG WITHIN THE DRIP LINE IN AREAS WHERE ROOTS TWO INCHES IN DIAMETER AND GREATER ARE PRESENT, OR WHEN IN CLOSE PROXIMITY TO LOW BRANCHING TREES. WHENEVER POSSIBLE, ROOTS TWO INCHES OR GREATER IN DIAMETER SHALL BE TUNNELED OR BORED UNDER AND SHALL BE COVERED TO PREVENT DEHYDRATION.
6. WHEN ROOT CUTTING IS UNAVOIDABLE, A CLEAN SHARP CUT SHALL BE MADE TO AVOID SHREDDING OR SMASHING. ROOT CUTS SHOULD BE MADE BACK TO A LATERAL ROOT. WHENEVER POSSIBLE, ROOTS SHOULD BE CUT BETWEEN LATE FALL AND BUD OPENING, WHEN ROOT ENERGY SUPPLIES ARE HIGH AND CONDITIONS ARE LEAST FAVORABLE FOR DISEASE CAUSING AGENTS. EXPOSED ROOTS SHALL BE COVERED IMMEDIATELY TO PREVENT DEHYDRATION. ROOTS SHALL BE COVERED WITH SOIL OR BURLAP AND KEPT MOIST.
7. WATERING OF PROTECTED TREES IN WHICH ROOTS WERE CUT SHALL BE PROVIDED BY THE CONTRACTOR.
8. AUGER TUNNELING RATHER THAN TRENCHING SHOULD BE USED FOR UTILITY PLACEMENT WITHIN DRIP LINE.
9. FENCING MATERIAL SHALL ENCIRCLE ANY TREE OR SHRUB WHOSE OUTER DRIP LINE EDGE IS WITHIN 20 FEET OF ANY CONSTRUCTION ACTIVITIES.
10. FENCING MATERIAL SHALL BE BRIGHT, CONTRASTING COLOR, DURABLE, AND A MINIMUM OF FOUR FEET IN HEIGHT.
11. FENCING MATERIAL SHALL BE SET AT THE DRIP LINE OR 10 FEET FROM TREE TRUNK, WHICHEVER IS GREATER, AND MAINTAINED IN AN UPRIGHT POSITION THROUGHOUT THE DURATION OF CONSTRUCTION ACTIVITIES.
12. ANY GRADE CHANGES (SUCH AS THE REMOVAL OF TOPSOIL OR ADDITION OF FILL MATERIAL) WITHIN THE DRIP LINE SHOULD BE AVOIDED FOR EXISTING TREES TO REMAIN. RETAINING WALLS AND TREE WELLS ARE ACCEPTABLE ONLY WHEN CONSTRUCTED PRIOR TO GRADE CHANGE.
13. SEDIMENT CONTROL BARRIERS TO BE PROVIDED WHERE FILL OR EXCAVATION WILL BE LOCATED NEAR TREE PROTECTION ZONES. SEE CIVIL DRAWINGS FOR SILT FENCE DETAILS AND LOCATIONS AT EDGES OF TREE PROTECTIONS ZONES WITHIN THE LIMITS OF DISTURBANCE.

## 4 TREE AND SHRUB PROTECTION

SCALE: 1/8" = 1'-0"

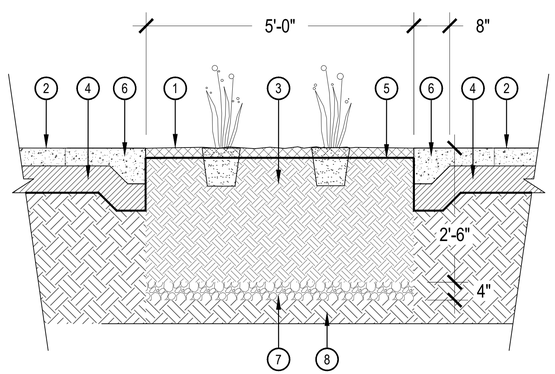


1. PLANTING BED MULCH, REFER TO MATERIAL SCHEDULE ON SHEET L-002 FOR MORE INFORMATION
2. ADJACENT CONCRETE FLATWORK, SEE MATERIAL SCHEDULE ON SHEET L-002 FOR FOR MORE INFORMATION
3. AMENDED TOPSOIL, REFER TO LANDSCAPE SPECIFICATIONS FOR TYPE AND DEPTH
4. COMPACTED SUBGRADE, AS RECOMMENDED BY GEOTECHNICAL REPORT
5. WEED CONTROL FABRIC, REFER TO LANDSCAPE SPECIFICATIONS
6. 18" CONCRETE PAVING BAND WITH THICKENED EDGE, SEE MATERIAL SCHEDULE ON SHEET L-002 FOR FOR MORE INFORMATION
7. 4" DEPTH OF GRAVEL FOR PLANTER DRAINAGE
8. UNDISTURBED SUBGRADE

## 5 PLAZA PLANTER

SCALE: 3/4" = 1'-0"

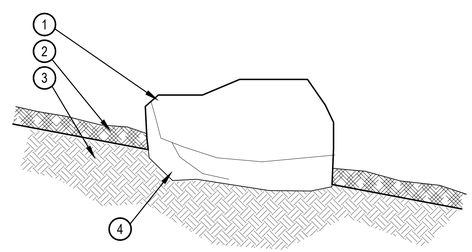


1. BOULDERS, SEE MATERIAL SCHEDULE ON SHEET L-002 FOR TYPE, CONTRACTOR SHALL SUBMIT SMALL SAMPLE OR PHOTOS FOR APPROVAL
2. SPECIFIED MULCH OR COBBLE, RE: PLAN
3. AMENDED TOPSOIL
4. PARTIALLY BURY BOULDER FOR NATURAL APPEARANCE

NOTES:
1. REFER TO PLANS FOR LOCATIONS.
2. THIS DETAIL ARE FOR FREE STANDING BOULDERS ONLY.

## 6 BOULDERS

SCALE: 3/4" = 1'-0"

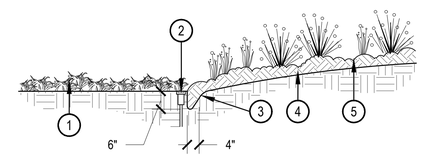


NOTE:
1. IF IRRIGATION HEAD IS LOCATED ADJACENT TO MULCH BEDS, OFFSET HEAD INTO GRASS AREA TO ENSURE STABLE SUPPORT.

1. TYPICALLY IRRIGATED TURFGRASS OR DRYLAND SEED
2. IRRIGATION HEADS SHOULD BE LOCATED ADJACENT TO MULCH BEDS, OFFSET HEAD INTO GRASS AREA TO ENSURE STABLE SUPPORT
3. VERTICAL SPADE CUT EDGE BY HAND FILLED WITH SPECIFIED MULCH, REFER TO MATERIAL SCHEDULE: MATERIAL O. TAPER EDGE OF BED SO MULCH IS DEEPER AGAINST SPADED EDGE
4. SPECIFIED MULCH, REFER TO MATERIAL SCHEDULE: MATERIAL O
5. PLANTING BED, REFER TO LANDSCAPE PLANS

## 7 SPADE CUT EDGE

SCALE: 1/2" = 1'-0"


OZ ARCHITECTURE
3003 Larimer Street
Denver, Colorado 80205
phone 303.861.5704
www.ozarch.com

NORRIS DESIGN
Planning | Landscape Architecture | Branding
409 Main Street
Suite 207
P.O. Box 2320
Frisco, CO 80443
P 970.368.7068
www.norris-design.com


# ONE RIVER RUN
75 HUNKI DORI CT.
KEYSTONE, CO 80435

PROJ. NO. 117033.00
DRAWN: ND/TA
CHECKED: ES/BR
APPROVED:
DATE: 2020/06/25

© OZ ARCHITECTURE

ONE RIVER RUN

ISSUED FOR:
PERMIT SET/FOR CONSTRUCTION

SHEET TITLE:
Landscape Details

SCALE:
SHEET NUMBER
L-501

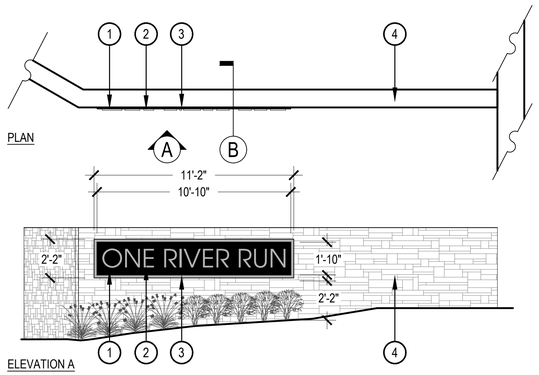

SIGN ILLUSTRATIVE (NTS)

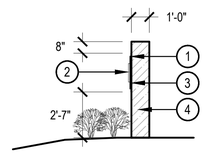


SECTION B

LETTERING AND LIGHTING CHARACTER IMAGE

1. 1/4" BLACK POWDER COATED STEEL SIGN PANEL SIGN, PIN MOUNTED ON BACKGROUND STAINLESS STEEL PANEL, PROVIDE ELECTRICAL TO SIGN PANEL AND LETTERING FOR LIGHTING
2. 12" STAINLESS STEEL REVERSE CHANNEL LETTERING, FONT TO BE UWR GOTHIC LIGHT, LETTERING TO BE PIN MOUNTED TO BLACK POWDER COATED SIGN PANEL AND INTERIOR LIT IN REVERSE CHANNEL LETTERING TO CREATE HALLO GLOW AFFECT
3. 1/2" STAINLESS STEEL BACKGROUND PANEL, MOUNTED ON TO WALL.
4. EXTERIOR WALL PER ARCHITECTURE, STONE FINISH, REFER TO ARCHITECTURE DRAWINGS FOR WALL DETAIL AND STRUCTURAL INFORMATION FOR WALL, ELECTRICAL TO BE COORDINATED WITHIN WALL STRUCTURE TO BRING ELECTRICAL TO SIGN
5. FINISHED GRADE

NOTES:
1. SIGN DETAIL FOR GRAPHIC AND DESIGN INTENT PURPOSES ONLY. SHOP DRAWINGS BY SIGN FABRICATOR ARE REQUIRED AND ARE TO BE APPROVED BY PROJECT LANDSCAPE ARCHITECT.
2. SIGN AREA TO BE A MAXIMUM OF 24 SQUARE FEET PER KEYSTONE PUD SIGN PROGRAM AND SUMMIT COUNTY SIGN CODE REGULATIONS.

## 1 ENTRY MONUMENT SIGN

SCALE: 1/4" = 1'-0"

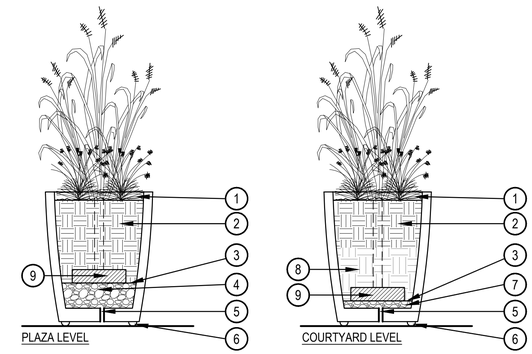


1. 2" DEPTH PLANTER POT MULCH, REFER TO MATERIAL SCHEDULE ON SHEET L-002
2. AMENDED ANNUAL POT TOPSOIL, REFER TO SPECIFICATIONS
3. MIRAFI FILTER FABRIC
4. 6" DEPTH CLEAN GRAVEL
5. ALL POTS TO HAVE DRAINAGE HOLES
6. POT PADS BY ALLSOP, OR APPROVED EQUAL, WHEN POT SITS ON PAVEMENT
7. 2" LAYER OF 1.5"-3" WASHED RIVER ROCK TO SUPPORT DRAINAGE, ROOFLITE DRAIN LIGHTWEIGHT AGGREGATE OR APPROVED EQUAL
8. 1' LIGHTWEIGHT SOIL, ROOFLITE INTENSIVE POTTING SOIL OR APPROVED EQUAL
9. PLANTER POT RESERVOIR, REFER TO AMENITY SCHEDULE SHEET L-002

NOTES:
1. ALL PLANTER POTS TO RECEIVE WATERING BLADDERS FOR PLANTING IRRIGATION.
2. SEE LANDSCAPE PLANS FOR NOTES ON PLANTING AND ANNUAL FLOWER PLANTING PROGRAM.
3. REFER TO AMENITY SCHEDULE FOR PLANTER POT SPECIFICATIONS AND SIZES.

## 2 PLANTER POT SOIL FILL

SCALE: NTS

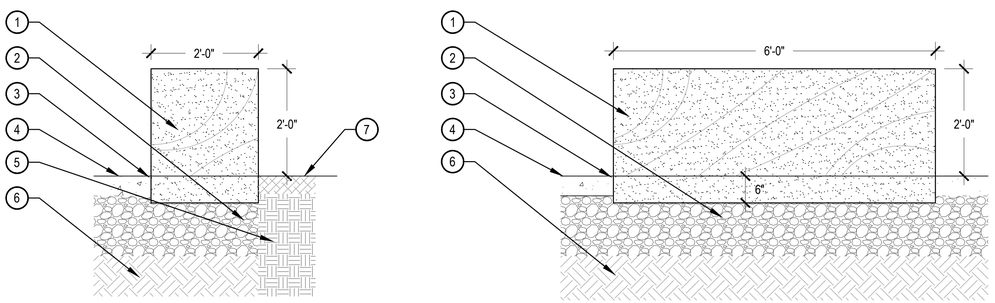


SECTION A

SECTION B

1. 24"x30"x6' SILOAM STONE BENCH TO BE BURIED 6" AND PLACED ON TOP OF COMPACTED AGGREGATE, STONE TO BE ROUGH CUT ON FRONT FACE AND SAW CUT ON TOP AND ALL OTHER SIDES, REFER TO AMENITY SCHEDULE ON SHEET L-002 FOR MORE INFORMATION
2. BASE COURSE: AGGREGATE 100% CRUSHED GRAVEL 3/4" TOP SIZE.
3. GAP BETWEEN STONE AND PAVING, BRUSH SAND INTO JOINT.
4. ADJACENT PAVING, REFER TO PLANS AND MATERIAL SCHEDULE FOR TYPE
5. AMENDED SOIL
6. COMPACTED SUBGRADE
7. ADJACENT PLANTING BED, REFER TO LANDSCAPE PLANS AND MATERIAL SCHEDULE ON SHEET L-002 FOR MORE INFORMATION

## 3 STONE BENCH

SCALE: 3/4" = 1'-0"

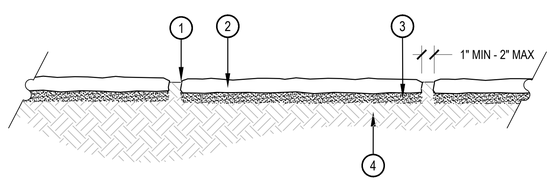


1. TOP OF STEPPING STONE SHALL BE SET SLIGHTLY ABOVE THE TOP OF ADJACENT MULCH
2. STEPPING STONE, REFER TO MATERIAL SCHEDULE ON SHEET L-002
3. 2" SAND SETTING LAYER
4. COMPACTED SUBGRADE. 95% STANDARD PROCTOR DENSITY

## 4 STEPPING STONES

SCALE: 1" = 1'-0"

1. COMPACTED CRUSHER FINES
2. SLOPE ADJACENT GRADE AWAY
3. COMPACTED SUBGRADE
4. BENDA BOARD EDGER WHERE CRUSHER FINES ARE NOT ADJACENT TO PAVING OR BUILDING FACADE, SEE MATERIAL SCHEDULE L-002 FOR EDGER INFORMATION
5. 4" DEPTH CLASS 6 COMPACTED ROAD BASE

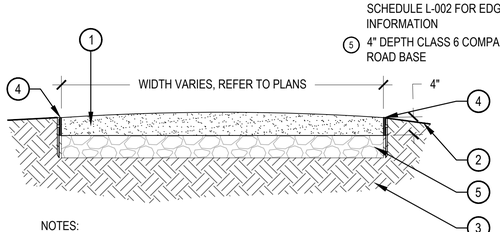


NOTES:
1. COMPACT WET FOR BEST RESULTS.
2. USE A SMALL (4') RIDING ROLLER TO COMPACT.
3. CROWN IN FLAT AREAS (AS SHOWN).
4. CROSS-SLOPE AT 1-2% WITH GRADE WHERE TOPOGRAPHY DICTATES.

## 5 CRUSHER FINES

SCALE: 3/4" = 1'-0"

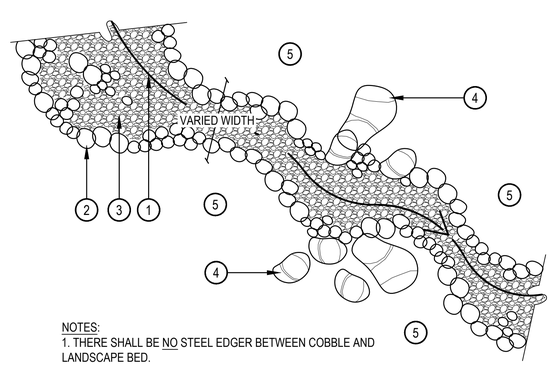


NOTES:
1. THERE SHALL BE NO STEEL EDGER BETWEEN COBBLE AND LANDSCAPE BED.
2. SPECIFIED WEED BARRIER FABRIC SHALL BE INSTALLED UNDER ALL COBBLE. NO WEED BARRIER FABRIC SHALL BE VISIBLE.

1. SWALE BOTTOM TO NOT IMPEDE FLOW
2. 6"-12" RIVER ROCK ROCK COBBLE SET ON EDGE OF SWALE AS WELL AS IN A FEW INTERIOR AREAS TO CREATE A LOOSE, NATURALISTIC BORDER AS SHOWN, REFERENCE MATERIAL SCHEDULE ON SHEET L-002
3. 2"-4" COBBLE IN INTERIOR AREAS OF SWALE AT 4"-5" DEPTH, REFERENCE MATERIAL SCHEDULE ON SHEET L-002
4. BOULDERS SET IN AND AROUND SWALE, REFERENCE MATERIAL SCHEDULE ON SHEET L-002 AND SEE BOULDER DETAIL 6, SHEET L-501
5. ADJACENT PLANTING BED OR SIDEWALK, REFER TO LANDSCAPE AND HARDSCAPE PLANS

## 6 COBBLE SWALE

SCALE: 1/4" = 1'-0"

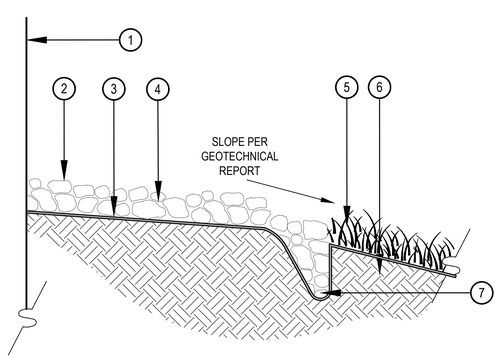


NOTES:
1. COBBLE DRIP LINE TO BE INCLUDED AROUND PERIMETER OF ALL BUILDINGS WHERE ROOF LINE EXTENDS AND SHEDS WATER / SNOW.

1. ADJACENT BUILDING
2. RIVER ROCK COBBLE; REFER TO MATERIAL SCHEDULE L ON SHEET L-002
3. WEED BARRIER FABRIC; 24" MINIMUM LAP JOINT
4. FINISH GRADE
5. ADJACENT NATIVE GRASS OR LANDSCAPE BED, REFER TO LANDSCAPE PLANS FOR ADJACENT TREATMENT TYPE
6. UNDISTURBED SUBGRADE
7. SPADE CUT EDGE OF DRIP LINE

## 7 COBBLE DRIP LINE

N.T.S.


OZ ARCHITECTURE
3003 Larimer Street
Denver, Colorado 80205
phone 303.861.5704
www.ozarch.com

NORRIS DESIGN
Planning | Landscape Architecture | Branding
409 Main Street
Suite 207
P.O. Box 2320
Frisco, CO 80443
P 970.368.7068
www.norris-design.com


ONE RIVER RUN
75 HUNKI DORI CT.
KEYSTONE, CO 80435

PROJ. NO. 117033.00
DRAWN: ND/TA
CHECKED: ES/BR
APPROVED:
DATE: 2020/06/25

© OZ ARCHITECTURE

ONE RIVER RUN

ISSUED FOR:
PERMIT SET/FOR CONSTRUCTION

SHEET TITLE:
Landscape Details

SCALE:
SHEET NUMBER
L-502

PAVER SECTION

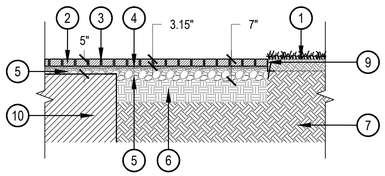


PAVER PATTERN

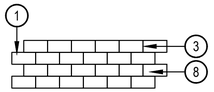


PAVER PLAN

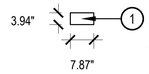


1. ADJACENT LANDSCAPE, REFER TO LANDSCAPE PLANS FOR ADJACENT CONDITION
2. PLAZA PAVERS, REFER TO MATERIAL SCHEDULE ON SHEET L-002 FOR MORE INFORMATION
3. SAND-FILLED JOINTS, NOMINAL 1/8" JOINTS
4. MINIMUM 1.5" WASHED SAND SETTING LAYER CONFORMING TO THE GRADING REQUIREMENTS OF ASTM C 33, SCREED TO THE GRADE AND PROFILE SHOWN ON PLANS AND DETAILS, REFER TO MECHANICAL FOR SNOW-MELT LAYOUT IN THIS LAYER
5. CDOT CLASS 6 ROAD BASE, COMPACTED TO 95% STANDARD PROCTOR DENSITY, 4" DEPTH PER MANUFACTURER RECOMMENDATION, 1 5/8" OVER STRUCTURE, ALSO REFER TO CIVIL SPECIFICATION
6. SUBGRADE COMPACTED TO 95% STANDARD PROCTOR DENSITY
7. UNDISTURBED SUBGRADE
8. RUNNING BOND PAVER PATTERN
9. PAVER RESTRAINT RAIL EDGER, STAKED, TOP OF EDGER TO BE SET $\frac{1}{8}$" MIN. BELOW GRADE, TO BE USED BETWEEN ADJACENT LANDSCAPE OR ARTIFICIAL TURF AND PAVERS, NOT NECESSARY WHEN PAVERS ABUT BUILDING, WALLS OR CONCRETE PAVING, SEE MATERIAL SCHEDULE ON SHEET L-002 FOR MORE INFORMATION
10. STRUCTURE AND INSULATION BELOW GRADE, REFER TO ARCHITECTURE

NOTES:
1. REFER TO PLANS FOR LOCATIONS OF STANDARD PLAZA PAVERS.
2. STANDARD CONCRETE PAVERS HAVE DIFFERENT DIMENSIONS, PROFILE AND INSTALLATION REQUIREMENTS THAN THE DRIVABLE PLAZA PAVERS.
3. PLEASE REFER TO MANUFACTURER RECOMMENDATIONS AND CIVIL SPECIFICATIONS FOR SPECIFIED PAVER INSTALLATION.

## 1 STANDARD PLAZA PAVER

SCALE: 1/2" = 1'-0"

PAVER SECTIONS

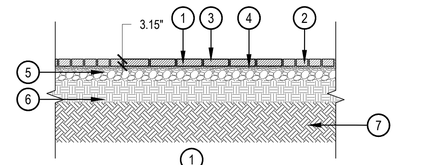


PAVER PATTERNS

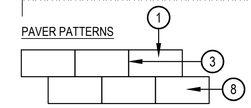


PAVER PLANS

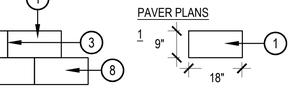


1. ENHANCED PAVER 1, REFER TO MATERIAL SCHEDULE ON SHEET L-002 FOR MORE INFORMATION
2. PLAZA PAVERS, REFER TO MATERIAL SCHEDULE ON SHEET L-002 FOR MORE INFORMATION
3. SAND-FILLED JOINTS, NOMINAL 1/16" JOINTS
4. MINIMUM 1.5" WASHED SAND SETTING LAYER CONFORMING TO THE GRADING REQUIREMENTS OF ASTM C 144, SCREED TO THE GRADE AND PROFILE SHOWN ON PLANS AND DETAILS, REFER TO MECHANICAL FOR SNOW-MELT LAYOUT IN THIS LAYER
5. CDOT 6 ROAD BASE, COMPACTED TO 95% STANDARD PROCTOR DENSITY, MINIMUM 4" DEPTH PER MANUFACTURER RECOMMENDATION, ALSO REFER TO CIVIL SPECIFICATION
6. SUBGRADE COMPACTED TO 95% STANDARD PROCTOR DENSITY
7. UNDISTURBED SUBGRADE
8. RUNNING BOND PAVER PATTERN

NOTES:
1. REFER TO PLANS FOR LOCATIONS OF ENHANCED PAVERS.
2. ENHANCED PAVERS HAVE DIFFERENT DIMENSIONS, PROFILE AND INSTALLATION REQUIREMENTS THAN THE DRIVABLE PLAZA PAVERS.
3. PLEASE REFER TO MANUFACTURER RECOMMENDATIONS AND CIVIL SPECIFICATIONS FOR SPECIFIED PAVER INSTALLATION.

## 3 ENHANCED PAVERS

SCALE: 1/2" = 1'-0"

PAVER SECTION

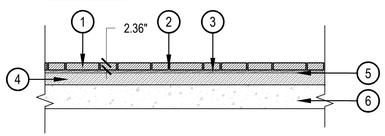


PAVER PATTERN

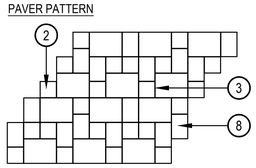


PAVER PLANS

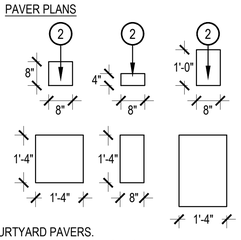


1. COURTYARD PAVER, REFER TO MATERIAL SCHEDULE ON SHEET L-002 FOR MORE INFORMATION
2. SAND-FILLED JOINTS, NOMINAL 1/8" JOINTS
3. MINIMUM 1.5" WASHED SAND SETTING LAYER CONFORMING TO THE GRADING REQUIREMENTS OF ASTM C 33, SCREED TO THE GRADE AND PROFILE SHOWN ON PLANS AND DETAILS, REFER TO MECHANICAL FOR SNOW-MELT LAYOUT IN THIS LAYER
4. INSULATION OVER SUB-DECK, REFER TO ARCHITECTURE FOR MORE INFORMATION
5. WATERPROOFING MEMBRANE, REFER TO ARCHITECTURE FOR MORE INFORMATION
6. SUB-DECK STRUCTURAL SLAB, REFER TO ARCHITECTURE AND STRUCTURAL FOR MORE INFORMATION
7. RANDOM ASHLAR PAVER PATTERN

NOTES:
1. REFER TO PLANS FOR LOCATIONS OF COURTYARD PAVERS.
2. PLEASE REFER TO MANUFACTURER RECOMMENDATIONS FOR SPECIFIED PAVER INSTALLATION.

## 4 COURTYARD PAVER

SCALE: 1/2" = 1'-0"

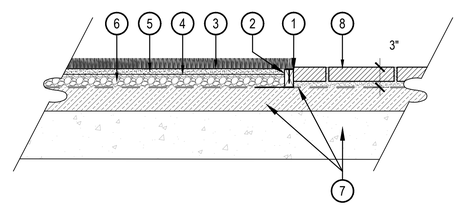


1. L-CHANNEL TO CONTAIN ARTIFICIAL TURF MEDIUM, TOP OF CHANNEL TO BE $\frac{1}{2}$" BELOW TOP OF ADJACENT PAVERS, ADHERE NAILER BOARD TO L-CHANNEL
2. 2"X3" PRESSURE TREATED WOOD NAILER BOARD, 1/4" FROM TOP OF PAVER, SECURE TURF TO NAILER BOARD WITH TAPCON SCREWS ACCORDING TO MANUFACTURER'S RECOMMENDATION
3. ARTIFICIAL TURF, REFER TO MATERIAL SCHEDULE ON SHEET L-002
4. LANDSCAPE FABRIC BARRIER
5. 1" MIN DEPTH CRUSHER FINES BASE
6. 2" MINIMUM DEPTH COMPACTED AGGREGATE BASE
7. WATER PROOF MEMBRANE, INSULATION AND SUBDECK, REFER TO ARCHITECTURE
8. ADJACENT COURTYARD PAVERS, REFER TO MATERIAL SCHEDULE ON SHEET L-002 AND DETAIL 4 ON SHEET L-503

## 5 ARTIFICIAL TURF LAWN

SCALE: 1" = 1'-0"


OZ ARCHITECTURE
3003 Larimer Street
Denver, Colorado 80205
phone 303.861.5704
www.ozarch.com

NORRIS DESIGN
Planning | Landscape Architecture | Branding
409 Main Street
Suite 207
P.O. Box 2320
Frisco, CO 80443
P 970.368.7068
www.norris-design.com


ONE RIVER RUN
75 HUNKI DORI CT.
KEYSTONE, CO 80435

PROJ. NO. 117033.00
DRAWN: ND/TA
CHECKED: ES/BR
APPROVED:
DATE: 2020/06/25

811

© OZ ARCHITECTURE

ONE RIVER RUN

ISSUED FOR:
PERMIT SET/FOR CONSTRUCTION

SHEET TITLE:
Landscape Details

SCALE:
SHEET NUMBER
L-503

## IRRIGATION GENERAL NOTES:

1. THE CONTRACTOR SHALL PROVIDE ALL LABOR, MATERIALS AND EQUIPMENT NECESSARY TO INSTALL THE IMPROVEMENTS SHOWN ON THE PLANS.
2. THE CONTRACTOR SHALL COORDINATE AS NECESSARY WITH THE GENERAL CONTRACTOR AND OWNER'S REPRESENTATIVE FOR SUCCESSFUL COMPLETION OF THIS WORK.
3. THE CONTRACTOR ASSUMES ALL LIABILITY ASSOCIATED WITH THE MODIFICATION OF THE IRRIGATION SYSTEM DESIGN WITHOUT NOTIFYING THE OWNER'S REPRESENTATIVE.
4. ALL IRRIGATION EQUIPMENT IS TO BE AS SPECIFIED OR APPROVED EQUAL PER THE DISCRETION OF THE OWNER'S REPRESENTATIVE.
5. IT IS THE CONTRACTOR'S RESPONSIBILITY TO CONDUCT A THOROUGH SITE INSPECTION AND REVIEW OF THE PROJECT CONSTRUCTION DOCUMENTS INCLUDING BUT NOT LIMITED TO THE FOLLOWING: LANDSCAPE PLAN, UTILITY PLAN, CIVIL PLAN, GRADING AND DRAINAGE PLAN AND ALL OTHER ASSOCIATED PLANS THAT AFFECT THIS WORK PRIOR TO BEGINNING CONSTRUCTION. IF THE CONTRACTOR OBSERVES ANY DISCREPANCIES AMONG THE CONSTRUCTION DOCUMENTS AND THE EXISTING CONDITIONS ON SITE, IT IS THEIR RESPONSIBILITY TO CONTACT THE OWNER'S REPRESENTATIVE IMMEDIATELY.
6. THE CONTRACTOR SHALL CONFORM TO ALL LOCAL AND STATE REGULATIONS AND INSTALL THE IRRIGATION SYSTEM AND ITS COMPONENTS PER THE MANUFACTURER'S SPECIFICATIONS. THE CONTRACTOR SHALL OBTAIN AND PROVIDE PAYMENT FOR ALL PERMITS REQUIRED BY ANY LOCAL AND STATE AGENCIES AND UTILITY COMPANIES HAVING JURISDICTION OVER THIS SITE.
7. CONTRACTOR IS RESPONSIBLE FOR SCHEDULING AND PAYING FOR TESTING OF THE BACKFLOW PREVENTER BY A STATE CERTIFIED INSPECTOR. CONTRACTOR SHALL PROVIDE CERTIFICATES TO OWNER'S REPRESENTATIVE.
8. THE CONTRACTOR MUST VERIFY THE LOCATION OF ALL UNDERGROUND UTILITIES PRIOR TO CONSTRUCTION. IF THE CONTRACTOR FAILS TO DO SO AND DAMAGES ANY UNDERGROUND UTILITIES THROUGH THE COURSE OF HIS WORK THE IRRIGATION CONTRACTOR SHALL PAY FOR ANY REPAIR WORK ASSOCIATED WITH SAID DAMAGES.
9. IT IS THE INTENT OF THIS DESIGN THAT ALL IRRIGATION EQUIPMENT BE INSTALLED WITHIN LANDSCAPE AREAS AND WITHIN THE PROJECT LIMITS. EQUIPMENT SHOWN OUTSIDE OF THESE LIMITS IS SHOWN FOR GRAPHIC CLARITY ONLY. IF THERE IS A QUESTION REGARDING THE LOCATION OF ANY COMPONENT OF THE IRRIGATION SYSTEM, IT IS THE CONTRACTOR'S RESPONSIBILITY TO CONTACT THE OWNER'S REPRESENTATIVE. IF THE CONTRACTOR NEGLECTS TO NOTIFY THE NECESSARY PARTIES, THE CONTRACTOR SHALL PAY FOR ANY REPLACEMENT OR MODIFICATION TO INSURE PROPER LOCATION AND OPERATION OF THE IRRIGATION SYSTEM AND ITS COMPONENTS.
10. ALL IRRIGATION DISTRIBUTION LINES AND EQUIPMENT INCLUDING BUT NOT LIMITED TO, MAINLINE, LATERALS, SPRAY HEADS, ROTORS, ROTARY SPRAYS, DRIP EMITTERS SHALL BE KEPT A MINIMUM DISTANCE OF 6' AWAY FROM ALL BUILDING AND WALL FOUNDATIONS, OR AS STIPULATED IN THE GEOTECHNICAL REPORT, WHICHEVER IS GREATER.
11. ALL VALVE BOXES AND LIDS SHALL BE PLASTIC WITH BOLT LOCKING COVERS. CONTRACTOR SHALL PROVIDE AND INSTALL BOLT LOCKING KIT. LID COLOR TO BE GREEN. INSTALL PER THE CONSTRUCTION DETAILS. DO NOT INSTALL IN PAVED AREAS.
12. ALL VALVE BOXES SHALL BE INSTALLED A MINIMUM OF 1'-0" FROM THE EDGE OF PAVED SURFACES AND 3'-0" FROM THE CENTERLINE OF DRAINAGE SWALES OR RETENTION BASINS.THE CONTRACTOR SHALL ADJUST ALL VALVE BOXES TO BE FLUSH FINISH GRADE.CONTRACTOR TO BRAND VALVE ID NUMBER ON ALL LIDS.
13. GROUNDING FOR THE IRRIGATION CONTROLLER IS TO BE INSTALLED PER THE MANUFACTURER'S SPECIFICATIONS AND PER THE AMERICAN SOCIETY OF IRRIGATION CONSULTANTS GUIDELINE 100-2002 FOR EARTH GROUNDING ELECTRONIC EQUIPMENT IN IRRIGATION SYSTEMS FOUND AT www.asic.org/Design_Guides.aspx. FOR TECHNICAL SUPPORT REGARDING THE IRRIGATION CONTROLLER OR GROUNDING PLEASE CONTACT RAIN BIRD TECHNICAL SERVICES AT (800) 724-6247.
13. CONTRACTOR SHALL EXTEND THREE (3) SPARE CONTROL WIRES (2 CONTROL/1 COMMON) TO THE END OF ALL MAINLINE BRANCHES SERVING THE CONTROLLER. CONTRACTOR TO COIL 24" LENGTH OF SPARE WIRING IN EACH VALVE BOX AND COIL 30" LENGTH MIN. OF SPARE WIRES IN A 10" ROUND BOX AT THE END OF THE MAINLINE. SPARE WIRES TO BE DIFFERENT IN COLOR FROM OTHER CONTROL WIRE, SEE SPECIFICATIONS..
14. CONTROLLER WIRE SHALL BE 14GA MIN. UL APPROVED WIRE, COLOR CODED PER VALVE, TAPED AND BUNDLED EVERY 10'. CONTRACTOR SHALL USE UL APPROVED WIRE STRIPPER AND WATERPROOF CONNECTIONS AT ALL SPLICES AND CONNECTIONS POINTS.
15. CONTRACTOR SHALL INSTALL TRACER WIRE IN ALL PRESSURE MAINLINE TRENCHES. SEE IRRIGATION DETAILS FOR MORE INFORMATION.
16. IT IS THE CONTRACTOR'S RESPONSIBILITY TO ENSURE ADEQUATE VERTICAL SEPARATION BETWEEN ALL IRRIGATION DISTRIBUTION LINES AND ALL UTILITIES (EXISTING OR PROPOSED), CONDUIT, STORM WATER COMPONENTS, DRAINS, ETC.
17. PLANT MATERIAL LOCATIONS TAKE PRECEDENCE OVER IRRIGATION LINES. COORDINATE INSTALLATION OF IRRIGATION EQUIPMENT SO THAT IT DOES NOT INTERFERE WITH THE PLANTING OF TREES OR OTHER LANDSCAPE MATERIAL INCLUDING PERENNIAL BEDS.
18. THE CONTRACTOR SHALL STAKE THE LOCATION OF THE MAINLINE, DRIP IRRIGATION LINES, CONTROL VALVES, GATE VALVES, ETC. AND SCHEDULE A REVIEW WITH THE OWNER'S REPRESENTATIVE PRIOR TO INSTALLATION.
19. LAYOUT DRIP LATERALS PARALLEL TO TOPOGRAPHY WHEREVER POSSIBLE. STAKE 3/4" DRIP TUBING IN PLACE AT 12" DEPTH AND BURY. INSTALL HOSE END FLUSHABLE TYPE END CAP AT ENDS OF ALL 3/4" POLYETHYLENE DRIP TUBING AND FLUSH THOROUGHLY BEFORE INSTALLING EMITTERS.
20. TREES SHALL BE IRRIGATED BY ROOT ZONE WATERING BUBBLERS, SEE EMITTER SCHEDULE FOR ADDITIONAL INFORMATION.
21. SHRUBS, GROUNDCOVER AND PERENNIALS SHALL BE IRRIGATED BY PRESSURE REGULATING SINGLE OUTLET EMITTERS, SEE EMITTER SCHEDULE FOR ADDITIONAL INFORMATION.
22. CONTRACTOR SHALL FINE TUNE AND ADJUST NOZZLE DIRECTION AND RADIUS TO REDUCE OVERSPARY ONTO PAVING OR HARD SURFACES.
23. CONTRACTOR SHALL INSTALL A QUICK COUPLER IN 10" VALVE BOX AT THE END OF ALL BRANCHES OF THE MAINLINE, OR AS SHOWN ON PLANS, FOR WINTERIZATION AND FLUSHING OF MAINLINE.
24. THIS IRRIGATION SYSTEM HAS BEEN DESIGNED TO OPERATE 3 NIGHTS A WEEK, 8 HOURS PER NIGHT WATERING WINDOW. ESTABLISHMENT WATERING WILL REQUIRE UP TO TWICE AS MUCH IRRIGATION FOR A 21 DAY PERIOD. THE DESIGN IS BASED ON THE FOLLOWING PROJECTED WEEKLY APPLICATION RATES AFTER ESTABLISHMENT. THESE FIGURES ARE BASED ON A 30-YEAR AVERAGE WEATHER DATA AND WILL NEED TO BE ADJUSTED DUE TO SEASONAL CHANGES AND WEATHER CONDITIONS ABOVE AND BELOW THE AVERAGE VALUES UTILIZED.
    - ORNAMENTAL PLANTINGS 1.00" PER WEEK PEAK SEASON
    - NATIVE SEED 1.00" PER WEEK (FOR ESTABLISHMENT)
25. THE CONTRACTOR SHALL PROVIDE A SEASONAL MAINTENANCE SCHEDULE WHICH SHALL BEGIN ON MAY 1ST AND END ON OCTOBER 1 TO INSURE THE EFFICIENCY AND LONGEVITY OF THE IRRIGATION SYSTEM. THE MAINTENANCE SCHEDULE SHALL INCLUDE BUT IS NOT LIMITED TO THE FOLLOWING LIST OF BEST MANAGEMENT PRACTICES:
    - CHECK HEADS FOR COVERAGE AND LEAKAGE.
    - CHECK CONTROLLER PROGRAMMING AND ADJUST FOR SEASONAL CHANGES AS NECESSARY.
    - VERIFY THAT THE WATER SUPPLY AND PRESSURE ARE AS STATED IN THE DESIGN.
    - CERTIFY THE BACKFLOW PREVENTION DEVICE AND SUBMIT TEST RESULTS TO THE PROPERTY MANAGER.
    - PERIODICALLY VERIFY THE THE SENSORS IN THE IRRIGATION SYSTEM ARE OPERATING CORRECTLY.
    - WINTERIZATION AND SPRING START UP PROCEDURES

## IRRIGATION POINT OF CONNECTION NOTES:

1. POINT OF CONNECTION:
    a. POCs 1, 2 AND 3

    IRRIGATION WATER WILL BE SUPPLIED TO THE GROUND FLOOR LANDSCAPE IMPROVEMENTS VIA WALL STUB OUT PROVIDED BY MEP. BACKFLOW PREVENTION DEVICE WILL BE LOCATED AT THE WALL SERVICE. POC 1 AND 3 CONNECTIONS WILL BE 3/4" IN SIZE, MAXIMUM FLOW OF 10 GPM. POC 2 CONNECTION WILL BE 1" IN SIZE, MAXIMUM FLOW OF 18 GPM. IRRIGATION CONTROLLERS WILL PROVIDED IN PROXIMITY TO POC. CONTROLLER REQUIRES 120V 60HZ POWER. ALL LANDSCAPE IMPROVEMENTS WILL BE IRRIGATED WITH POINT SOURCE DRIP IRRIGATION OR BUBBLERS. MAINLINE PIPE WILL BE CLASS 200 PVC PIPE. DRIP LATERALS WILL BE POLYETHYLENE PIPE.

    b. POC 4

    IRRIGATION WATER WILL BE SUPPLIED TO AMENITY DECKS ON THE LOBBY LEVEL VIA THE POOL EQUIPMENT ROOM IRRIGATION CONNECTION PROVIDED BY MEP. BACKFLOW PREVENTION DEVICE WILL BE LOCATED IN THE POOL EQUIPMENT ROOM. CONNECTION WILL BE 3/4" IN SIZE, MAXIMUM FLOW OF 10 GPM. AUTOMATIC IRRIGATION CONTROLLERS WILL PROVIDED AT THE DECK LEVEL. CONTROLLERS REQUIRES 120V 60HZ POWER. ALL LANDSCAPE IMPROVEMENTS WILL BE IRRIGATED WITH POINT SOURCE DRIP IRRIGATION MAINLINE PIPE WILL BE CLASS 200 PVC PIPE. DRIP LATERALS WILL BE POLYETHYLENE PIPE.

    c. THE CONTRACTOR SHALL CONFORM TO ALL LOCAL CODES, OBTAIN AND PROVIDE PAYMENT FOR ALL PERMITS ASSOCIATED WITH THIS WORK.
2. CONTROLLER LOCATIONS: CONTROLLER SHALL BE WALL MOUNTED IN PROXIMITY TO EACH POC. COORDINATE 120V/60Hz POWER IN EACH LOCATION. ALL EQUIPMENT INSTALLATION SHALL CONFORM TO ALL LOCAL CODES.
3. SENSOR LOCATION: EACH POC HAS ITS OWN RAINSENSOR. MOUNT THE RAIN/FREEZE SENSOR ON THE BUILDING FASCIA IN THE VICINITY OF THE CONTROLLER. SENSOR SHALL BE MOUNTED IN LOCATION IN FULL SUN, OPEN TO RAINFALL AND AWAY FROM HEAT SOURCES. SENSOR SHALL BE LOCATED NO MORE THAN 200' (LINE OF SIGHT) FROM THE CONTROLLER. MOUNT THE RECEIVER ADJACENT TO OR ON THE SIDE OF THE CONTROLLER PRIOR TO SENSOR INSTALLATION.
4. SYSTEM PRESSURE: **THE SYSTEM HAS BEEN DESIGNED FOR A REQUIRED MINIMUM STATIC PRESSURE OF X PSI. MAXIMUM SAFE FLOW OF X GPM. CONNECTION IN WATER ROOM TO HAVE A PRESSURE REDUCING VALVE SET AT 75 PSI. CONTRACTOR TO VERIFY VALVE IS SET AT X PSI.** THE CONTRACTOR IS RESPONSIBLE FOR VERIFYING THE PRESSURE IN THE FIELD AT THE POINT OF CONNECTION AND MAXIMUM DEMAND OF ANY VALVE OR PROGRAM BEFORE CONSTRUCTION BEGINS AND FOR NOTIFYING THE OWNER'S REPRESENTATIVE OF ANY DISCREPANCY BETWEEN THE DESIGN PRESSURE OF THE SYSTEM AND THE MEASURED PRESSURE IN THE FIELD. IF THE CONTRACTOR FAILS TO NOTIFY OWNER'S REPRESENTATIVE OF SUCH DISCREPANCIES, THEN THE CONTRACTOR ASSUMES ALL LIABILITY AND COSTS ASSOCIATED WITH SYSTEM MODIFICATIONS TO ACCOMMODATE THE ACTUAL PRESSURE.
6. COMMUNICATION: THE CONTROLLER IS CAPABLE OF OPERATING UP TO 2 VALVES SIMULTANEOUSLY. VALVES ARE PROGRAMMED BASED ON STATION. PRO HC CONTROLLER IS ALSO EQUIPPED WITH WIFI MODULE WITH ACCESS TO HYDRAWISE, A FREE CLOUD BASED CENTRAL CONTROL AND MANAGEMENT SOFTWARE. CONTROLLER CAN MONITORED REMOTELY FROM ANYWHERE WITH A WIFI CONNECTION OR CAN BE ACCESS MANUALLY AT THE CONTROLLER. IT IS HIGHLY RECOMMENDED THAT THIS SOFTWARE BE UTILIZED DURING THE INSTALLATION AND MANAGEMENT OF THE LANDSCAPE. TYPICAL WI-FI RANGE COVERS 150' TO 200'. BE SURE TO INSTALL THE CONTROLLER WITHIN SUITABLE RANGE OF A NETWORK ROUTER. (CONTACT RYAN BUSHMAN (RBushman@hunterindustries365.onmicrosoft.com) FOR SET UP SUPPORT.

## SLEEVING COORDINATION NOTES:

1. **INSTALLATION OF IRRIGATION SLEEVING IS THE RESPONSIBILITY OF THE GENERAL CONTRACTOR.** SLEEVES SHALL BE INSTALLED PRIOR TO THE START OF PAVING OPERATIONS. THE GENERAL CONTRACTOR SHALL COORDINATE WITH THE IRRIGATION CONTRACTOR FOR LOCATION AND SIZING OF SLEEVES PRIOR TO THE START OF CONSTRUCTION.
2. THE CONTRACTOR SHALL SLEEVE ALL IRRIGATION DISTRIBUTION LINES, VALVE CONTROL WIRES AND COMMUNICATION WIRES UNDER ALL PAVED SURFACES, WALL FOOTERS, DRAINAGE CHANNELS, INLETS, CATCH BASINS, ETC.
3. ALL SLEEVES SHALL EXTEND A MINIMUM OF 1 FOOT BEYOND EDGE OF ALL OBSTRUCTIONS. NO TEES, ELLS OR OTHER TURNS IN PIPING SHALL BE LOCATED UNDER ANY OBSTRUCTIONS.
4. MARK ALL CURBS OR PAVING WITH AN 'X' AT ALL SLEEVE LOCATIONS.
5. SLEEVING SHALL BE INSTALLED PER THE SIZES AND QUANTITIES SHOWN ON THE PLANS BASED ON THE CHART BELOW. ALL MAINLINE, VALVE CONTROL AND COMMUNICATION WIRES, LATERALS AND 3/4" POLYETHYLENE DRIP TUBING UNDER PAVED SURFACES ARE TO BE INSTALLED IN SEPARATE SLEEVING.

| SLEEVED PIPE SIZE/WIRE QTY. | REQUIRED SLEEVE SIZE AND QTY. |
|---|---|
| ALL PIPING | 3" PVC (1) |
| 1-50 CONTROL WIRES | 3" PVC (1) |

## CONVENTIONAL WIRE NOTES

1. GROUNDING FOR THE IRRIGATION CONTROLLER SHALL BE INSTALLED PER THE MANUFACTURER'S SPECIFICATIONS AND PER THE AMERICAN SOCIETY OF IRRIGATION CONSULTANTS GUIDELINE 100-2002 FOR EARTH GROUNDING ELECTRONIC EQUIPMENT IN IRRIGATION SYSTEMS FOUND AT www.asic.org/Design_Guides.aspx. FOR TECHNICAL SUPPORT REGARDING THE IRRIGATION CONTROLLER OR GROUNDING PLEASE CONTACT THE MANUFACTURER.
2. NEW CONTROLLER WIRE SHALL BE 14GA MIN. UL APPROVED WIRE. CONTRACTOR SHALL VERIFY EXISTING CONNECTIONS AND USE UL APPROVED WIRE STRIPPER AND 3M DBR WATERPROOF CONNECTIONS AT ALL NEW SPLICES AND CONNECTION POINTS. CONTRACTOR TO INSTALL RED ELECTRIC MARKING TAPE WITH CONTROLLER WIRE THAT IS NOT WITH MAINLINE. WIRES SHALL BE BUNDLED TOGETHER BY BLACK ELECTRICAL TAPE EVERY 10 L.F.
3. CONTRACTOR SHALL HAVE 30" OF SPARE CONTROL WIRE PRESENT AT ALL SPLICE POINTS. SPARE WIRE SHALL BE COILED IN A NEAT AND ORDERLY FASHION AT EACH SLICE POINT.
4. CONTRACTOR SHALL EXTEND TWO (2) SPARE CONTROL WIRES, AND ONE SPARE COMMON WIRE AT THE END OF THE MAINLINE. CONTRACTOR SHALL INSTALL ONE (1) WIRE PULL BOX AT EACH END OF THE MAINLINE.

## IRRIGATION SCHEDULE

| SYMBOL | DESCRIPTION | MFR | MODEL NO. | COMMENTS | DETAIL |
|---|---|---|---|---|---|
| POC | POINT OF CONNECTION | NA | COPPER STUBS PROVIDED BY MEP | REFER TO PLUMBING PLAN | NA |
| | BACKFLOW PREVENTER | FEBCO | 3/4" BACKFLOW PREVENTER (825YA) POCs 1 AND 3<br>1" BACKFLOW PREVENTER (825YA) POC 2<br>3/4" BACKFLOW PREVENTER (860) POC 4 | | I-301/ 1<br>I-301/ 2 |
| C | IRRIGATION CONTROLLER | HUNTER | 6 STATION CONTROLLER (PHC-6-00) A, C, D & E<br>12 STATION CONTROLLER (PHC-12-00) B | WALL MOUNT | I-301/ 3 |
| | RAIN SENSOR | HUNTER | WIRELESS RAIN/FREEZE SENSOR (WR-CLIK) | | I-301/ 4 |
| | MANUAL DRAIN | MATCO | CARSON ROUND VALVE BOX (910)<br>BRONZE STOP VALVE (201X) | | I-302/ 1 |
| | QUICK COUPLER | HUNTER | CARSON ROUND VALVE BOX (910)<br>1" COUPLER (HQ-44LRC) | | I-303/ 1 |
| | GATE VALVE | MATCO | CARSON ROUND VALVE BOX (910)<br>BRONZE GATE VALVE (514-TX) | SIZE PER MAINLINE | I-302/ 4 |
| MV | MASTER VALVE | HUNTER | CARSON STANDARD VALVE BOX (1220)<br>1" MASTER VALVE (IBV-FS) | | I-302/ 2 |
| FS | FLOW SENSOR | HUNTER | CARSON STANDARD VALVE BOX (1220)<br>3/4" FLOW METER (HC-075-FLOW) | FLOW RANGE<br>0.22 GPM - 21 GPM | I-302/ 3 |
| | VALVE ASSEMBLY SPRAY | HUNTER | CARSON JUMBO VALVE BOX (1419)<br>SCH. 80 PVC BALL VALVE<br>CONTROL VALVE (ICV-G) | SIZE AS NOTED ON PLANS | I-302/ 5 |
| | VALVE ASSEMBLY DRIP | HUNTER | CARSON JUMBO VALVE BOX (1220)<br>SCH 80 PVC BALL VALVE<br>1" DRIP ZONE KIT (ICZ-101-25-LF) | | I-302/ 6 |
| ADJ. 360 | NATIVE SEED ROTARY | HUNTER | (PROS40-12-CV-F) MP-800SR NOZZLES<br>SHRUB ROTARY 12.0" POP-UP,CHECK VALVE.<br>40 PSI IN-STEM PRESSURE REGULATOR.<br>1/2" NPT FEMALE THREADED INLET. | 0.8" MATCHED PRECIPITATION RATE @ 40 PSI | I-303/ 2 |
| | SLEEVING | NA | CLASS 200 PVC | SEE SLEEVING NOTE | I-301/ 5 |
| | PVC MAINLINE | NA | 1" CLASS 200 BE PVC PIPE<br>ALL MAINLINE TO HAVE TRACER WIRE AND TAPE | | I-301/ 6 |
| | PVC SPRAY LATERAL | NA | 1" CLASS 200 PVC PIPE (MINIMUM) | UNLESS OTHERWISE NOTED ON PLAN | I-301/ 6 |
| TREE<br>SHRUB<br>PERENNIALS | DRIP LATERAL | RAINBIRD | 3/4" POLYETHYLENE TUBING<br>PROVIDE XP-1200X MICRO SPRAY FOR PERENNIALS AREAS SQ02 AND SQ04 NOZZLES | | I-301/ 6 |
| | FLUSH END CAP | HUNTER | CARSON ROUND VALVE BOX (910)<br>HOSE END FLUSH END CAP WITH OPERATIONAL INDICATOR (ECO-ID) | | I-301/ 6 |

VALVE CALLOUT

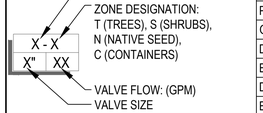


EMITTER SCHEDULE

| PLANT TYPE | EMITTER | QTY. | TOTAL GPH |
|---|---|---|---|
| PERENNIALS | 0.5 GPH | ONE EACH | 0.5 GPH |
| GRASSES | 0.5 GPH | ONE EACH | 0.5 GPH |
| DECIDUOUS SHRUBS | 0.5 GPH | TWO EACH | 1.0 GPH |
| EVERGREEN SHRUBS | 0.5 GPH | TWO EACH | 1.0 GPH |
| DECIDUOUS TREE | 1.0 GPH | SIX EACH | 6.0 GPH |
| EVERGREEN TREE | 1.0 GPH | SIX EACH | 6.0 GPH |

EMITTER NOTES

1. ALL TREE AND SHRUB MATERIAL SHALL BE IRRIGATED WITH RAIN BIRD XB SERIES PRESSURE COMPENSATING EMITTERS.
2. ALL CONTAINER PLANTS SHALL BE IRRIGATED WITH INTERNAL BLADDER SYSTEM REFERENCE LANDSCAPE PLANS FOR PRODUCT.
3. EMITTER SCHEDULE IS FOR REFERENCE ONLY. THE CONTRACTOR SHALL ADJUST EMITTER AND NUMBER OF EMITTERS BASED ON THE NEEDS OF INDIVIDUAL PLANTS OR PLANT HYDROZONES.
4. 1/4" DISTRIBUTION TUBING NOT TO EXCEED 8' IN LENGTH.
5. RAINBIRD DBC-025 DIFFUSER BUG CAP AND TS-025 STAKE ON ALL 1/4" DISTRIBUTION TUBING.
6. REFERENCE DETAILS 3,4,5 AND 6 ON SHEET I-303.

NATIVE SEED

| SYMBOL | DESCRIPTION | IRRIGATION APPLICATION |
|---|---|---|
| | IRRIGATED DRYLAND SEED | SHALL BE 12" POP-UP ROTARIES OR ROTORS, IRRIGATED AT APPROXIMATELY 70% COVERAGE FOR ESTABLISHMENT AND ARE ZONED SEPARATELY TO BE TURNED OFF AFTER THE ESTABLISHMENT PERIOD. |


OZ ARCHITECTURE
3003 Larimer Street
Denver, Colorado 80205
phone 303.861.5704
www.ozarch.com

NORRIS DESIGN
Planning | Landscape Architecture | Branding
409 Main Street
Suite 207
P.O. Box 2320
Frisco, CO 80443
P 970.368.7068
www.norris-design.com


ONE RIVER RUN
75 HUNKI DORI CT.
KEYSTONE, CO 80435

PROJ. NO. 117033.00
DRAWN: ND/TA
CHECKED: ES/BR
APPROVED:
DATE: 2020/06/25

© OZ ARCHITECTURE

ONE RIVER RUN

ISSUED FOR:
PERMIT SET/FOR CONSTRUCTION

SHEET TITLE:
IRRIGATION NOTES

SCALE:
SHEET NUMBER
I-001

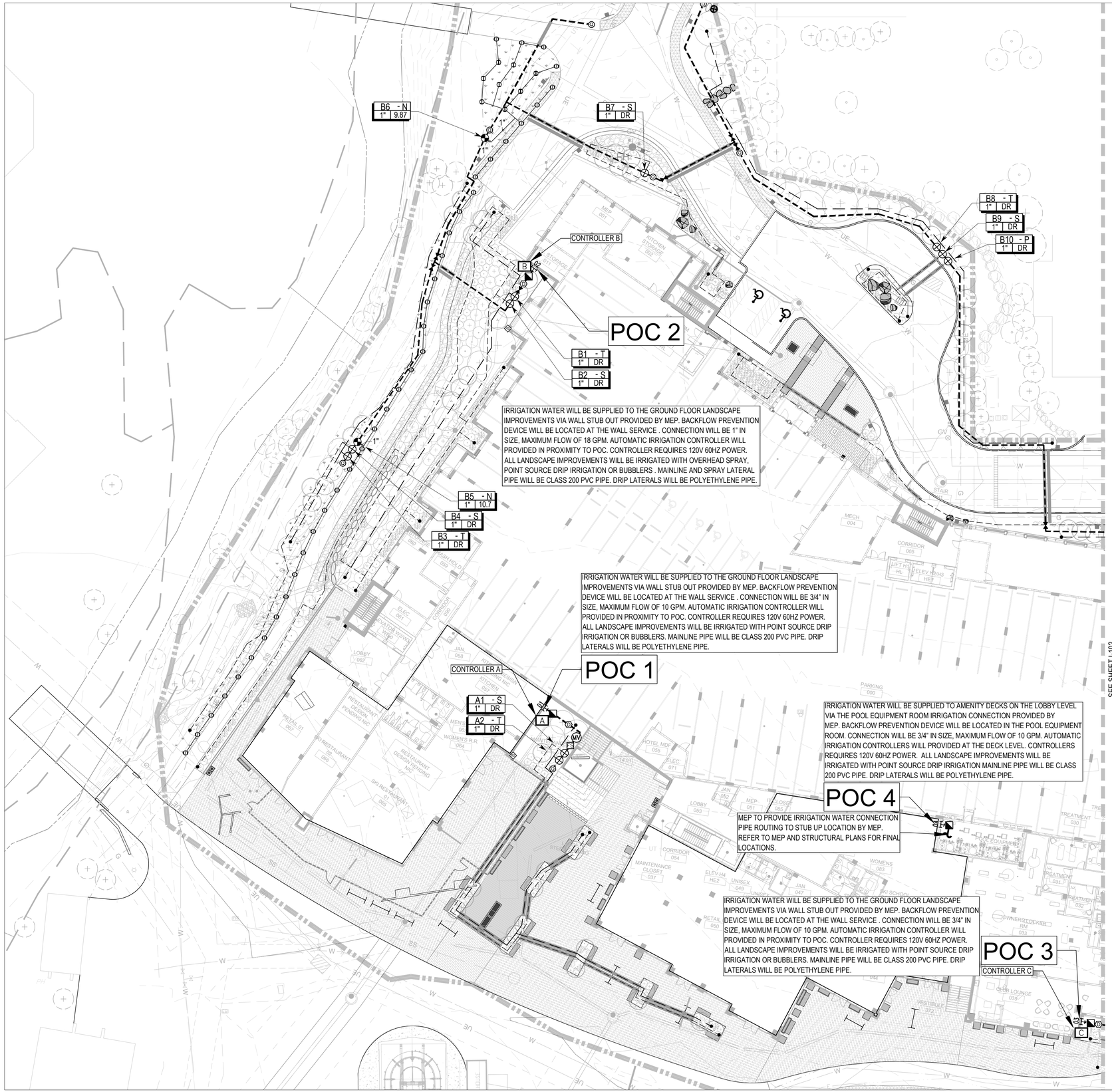



OZ ARCHITECTURE

3003 Larimer Street
Denver, Colorado 80205
phone 303.861.5704
www.ozarch.com

NORRIS DESIGN
Planning | Landscape Architecture | Branding

409 Main Street
Suite 207
P.O. Box 2320
Frisco, CO 80443
P 970.368.7068
www.norris-design.com


# ONE RIVER RUN
## 75 HUNKI DORI CT.
## KEYSTONE, CO 80435

PROJ. NO. 117033.00
DRAWN: ND/TA
CHECKED: ES/BR
APPROVED:
DATE: 2020/06/25

811

© OZ ARCHITECTURE

ONE RIVER RUN

ISSUED FOR:
PERMIT SET/FOR CONSTRUCTION

SHEET TITLE:
IRRIGATION PLAN: PLAZA LEVEL WEST

SCALE:
SHEET NUMBER

I-101

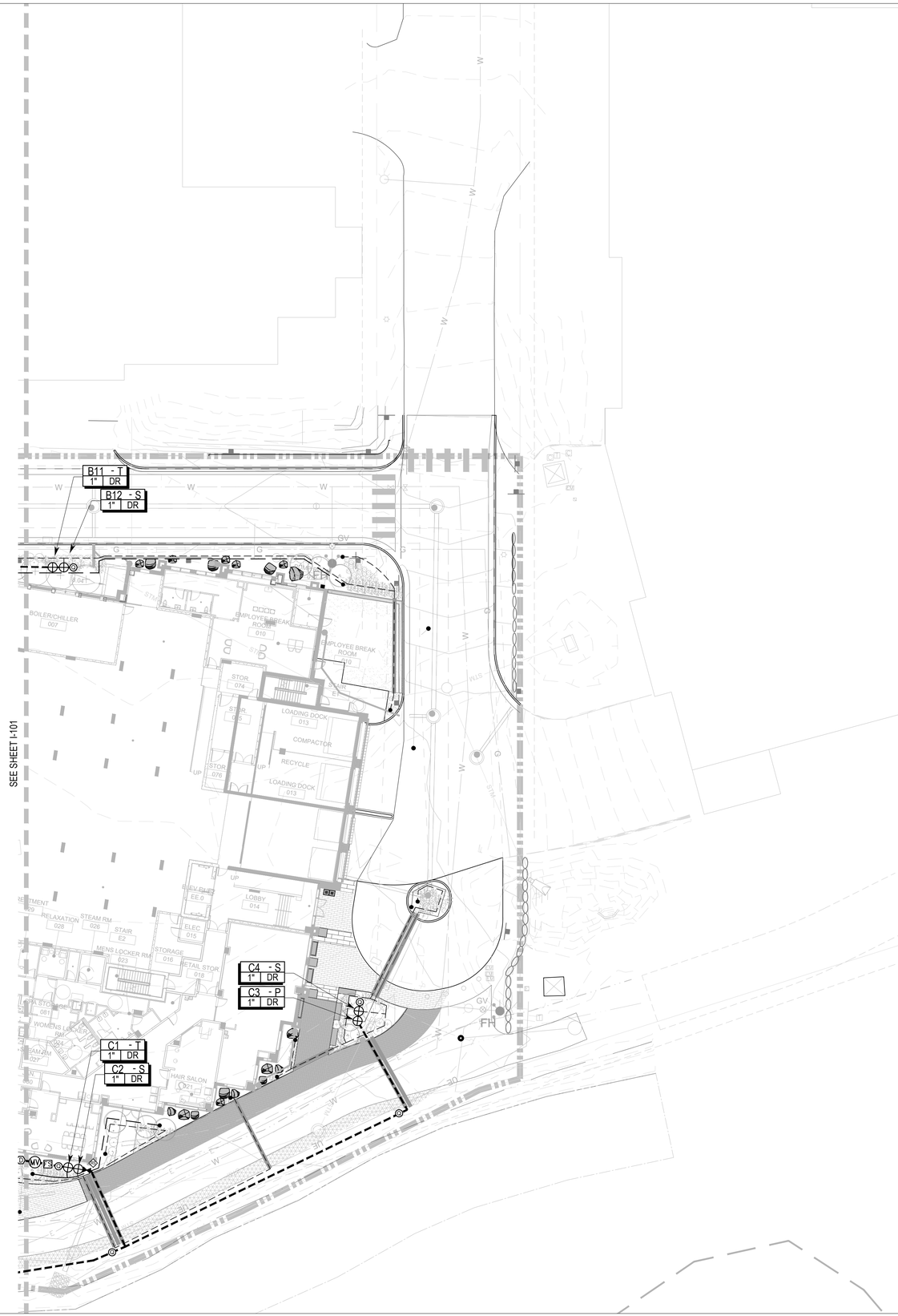


NORTH

0 10' 20' 40'

SCALE: 1"= 20'


OZ ARCHITECTURE

3003 Larimer Street
Denver, Colorado 80205
phone 303.861.5704
www.ozarch.com

NORRIS DESIGN
Planning | Landscape Architecture | Branding

409 Main Street
Suite 207
P.O. Box 2320
Frisco, CO 80443
P 970.368.7068
www.norris-design.com


# ONE RIVER RUN

75 HUNKI DORI CT.
KEYSTONE, CO 80435

PROJ. NO. 117033.00
DRAWN: ND/TA
CHECKED: ES/BR
APPROVED:
DATE: 2020/06/25

811

© OZ ARCHITECTURE

ONE RIVER RUN

ISSUED FOR:
PERMIT SET/FOR CONSTRUCTION

SHEET TITLE:
IRRIGATION PLAN:
PLAZA LEVEL EAST

SCALE:
SHEET NUMBER

I-102

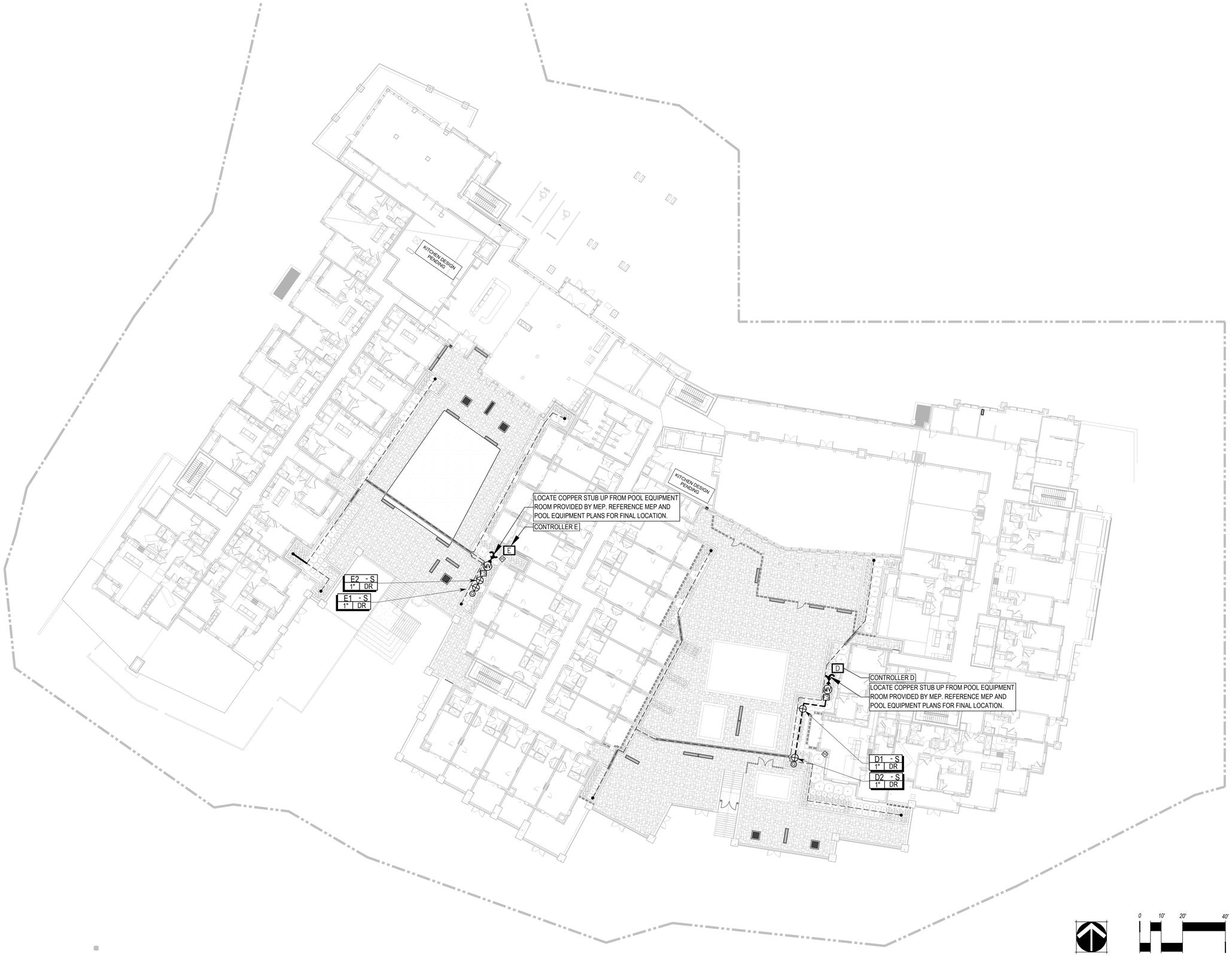


OZ ARCHITECTURE
3003 Larimer Street
Denver, Colorado 80205
phone 303.861.5704
www.ozarch.com

NORRIS DESIGN
Planning | Landscape Architecture | Branding
409 Main Street
Suite 207
P.O. Box 2320
Frisco, CO 80443
P 970.368.7068
www.norris-design.com

# ONE RIVER RUN
## 75 HUNKI DORI CT.
## KEYSTONE, CO 80435

PROJ. NO. 117033.00
DRAWN: ND/TA
CHECKED: ES/BR
APPROVED:
DATE: 2020/06/25

811

© OZ ARCHITECTURE

ONE RIVER RUN

ISSUED FOR:
PERMIT SET/FOR CONSTRUCTION

SHEET TITLE:
IRRIGATION PLAN: LOBBY LEVEL

SCALE:
SHEET NUMBER
I-201

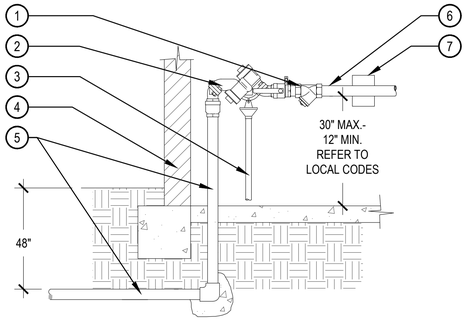


1. Y-STRAINER W/ 80-MESH SCREEN
2. FEBCO MODEL 825YA ASSEMBLY 90° OUTLET CONFIGURATION
3. LOCATE DRAIN TO FLOOR DRAIN WITH AIR GAP. REFER TO ARCHITECTURE OR MECHANICAL PLANS FOR LOCATION.
4. BUILDING WALL AND FOUNDATION
5. TYPE K COPPER, SIZE PER SCHEDULE. PENETRATE THROUGH WALL OR FLOOR TO EXTERIOR QUICK COUPLER
6. TYPE K COPPER MAINLINE FROM P.O.C. REFER TO PLUMBING PLANS.
7. MOUNTING BRACKET TO WALL AND/OR FLOOR. OWNER TO APPROVE LOCATION PRIOR TO MOUNTING

NOTE:
1. INSTALL PER LOCAL CODES AND MANUFACTURER'S SPECIFICATIONS.
2. PROVIDE PVC PIPE PROTECTION AROUND COPPER SUPPLY LINES AS THEY GO THROUGH WALLS OR THE CONCRETE SLAB BASE.
3. PROVIDE THRUST PROTECTION FOR LINES 2-1\2" OR LARGER.

## 1 BACKFLOW PREVENTER INDOOR INSTALLATION

SCALE: NTS

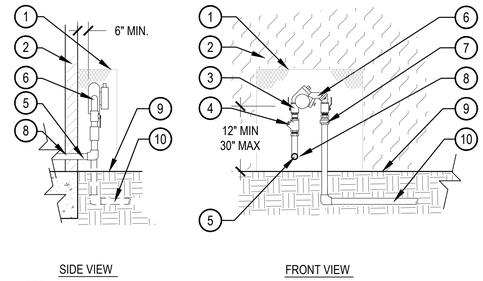


1. GUARDSHACK CUSTOM WALL ENCLOSURE
2. BUILDING WALL
3. BRONZE BALL VALVE BOTH SIDES
4. Y-STRAINER W/ 80-MESH SCREEN
5. 3/4" COPPER SERVICE LINE AT BUILDING WALL RE: PLUMBING
6. REDUCED PRESSURE BACKFLOW PREVENTER 90° OUTLET CONFIGURATION
7. SXS BRONZE UNION
8. PROVIDE PVC SLEEVE AND FLEXIBLE WATERPROOF SEAL AT ALL PAVING PENETRATIONS
9. FINISH GRADE AT PLANTER
10. PVC PIPE TO VALVES OR PLANTING AREAS.

NOTE:
1. INSTALL PER LOCAL CODES AND MANUFACTURER'S SPECIFICATIONS.
2. PROVIDE PVC PIPE PROTECTION AND FLEXIBLE WATERPROOF SEALANT (PER ARCHITECTURE) AROUND SUPPLY AT BUILDING WALL OR PLANTER WALLS.
3. ALL BOLTS FOR MOUNTING BRACKETS SHALL BE ZINC PLATED TAMPER PROOF.
4. COORDINATE ENCLOSURE DIMENSIONS AND INSTALLATION: GUARDSHACK

## 2 BACKFLOW PREVENTER AT WALL SERVICE

SCALE: NTS

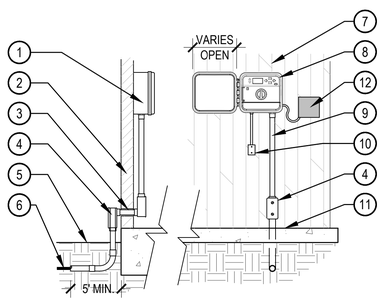


1. IRRIGATION CONTROLLER
2. BUILDING WALL
3. PROVIDE THROUGH WALL CONDUIT
4. CONDUIT 90° JUNCTION BOX THROUGH WALL (BOTH SIDES)
5. FINISH GRADE
6. UF DIRECT BURIAL WIRE TO REMOTE CONTROL VALVES
7. BUILDING WALL
8. WALL MOUNT CONTROLLER AT EYE-LEVEL INSTALL PER MANUFACTURER'S RECOMMENDATIONS
9. SCH. 80 PVC OR RIGID STEEL CONDUIT FOR CONTROL WIRES AND GROUNDING
10. 120 VAC POWER SUPPLY JUNCTION BOX
11. FINISH FLOOR
12. MOUNT SENSOR RECEIVER ADJACENT TO CONTROLLER

NOTE:
1. ALL ELECTRICAL MATERIALS SHALL BE U.L. APPROVED FOR USE AS SHOWN.
2. ALL ELECTRICAL AND CONTROLLER WIRE TO BE INSTALLED PER LOCAL CODE AND MANUFACTURER'S SPECIFICATIONS.
3. GROUND CONTROLLER PER LOCAL CODE AND MANUFACTURER'S SPECIFICATIONS.
4. PROVIDE WATERPROOF SEALANT FOR ALL CONDUIT AND WIRE ACCESS POINTS.

## 3 CONTROLLER WALL MOUNT INTERIOR

SCALE: NTS

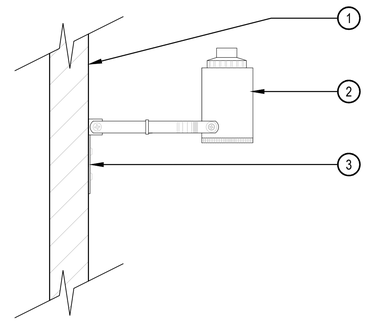

1. SUITABLE FASCIA, WALL, OR GUTTER MOUNT. MOUNT IN LOCATION WHERE SENSOR CAN RECEIVE FULL SUN AND IS OPEN TO RAINFALL.
2. WIRELESS RAIN SENSOR, LOCATE WITHIN 500' OF THE CONTROLLER.
3. SECURE MOUNTING BRACKET TO EXTERIOR WALL WITH SCREWS PER LOCAL CODES

NOTE:
1. PROVIDE WATERPROOF SEALANT FOR ALL CONDUIT AND WIRE ACCESS POINTS.
2. FINAL LOCATION AND MOUNTING SYSTEM TO BE DETERMINED BY OWNER.
3. SENSOR SHOULD NOT BE MOUNTED UNDER TREES, IN AREAS AFFECTED BY SPRINKLER SYSTEM OR UNDER EAVE OF HOUSE.

## 4 RAIN SENSOR SURFACE MOUNT

NTS

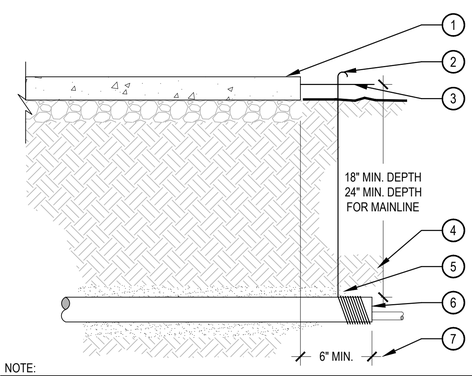


1. PAVING
2. WRAP 12 GAUGE GALVANIZED WIRE AROUND EACH END OF SLEEVE (10 WRAPS MIN.) AND EXTEND TO SURFACE AS A LOCATING DEVICE
3. FINISH GRADE / TOP OF DG
4. COMPACT SOIL AROUND SLEEVE TO SAME DENSITY AS ADJACENT UNDISTURBED SOIL
5. WASHED AND GRADED MORTAR SAND BACKFILL IN ROCKY SOIL CONDITIONS
6. PVC SLEEVE PER SCHEDULE, TWICE DIAMETER OF THE SUM OF THE PIPES/ WIRES
7. EXTEND SLEEVES 6" BEYOND EDGES OF PAVING

NOTE:
1. ALL SLEEVES SHALL BE INSPECTED PRIOR TO BACKFILLING.
2. CAP SLEEVES UNTIL USE.
3. MULTIPLE SLEEVES REQUIRE 4" HORIZONTAL SEPARATION WITHIN SAME SLEEVE TRENCH.
4. IRRIGATION PIPE AND WIRE SHALL NOT SHARE THE SAME SLEEVE.
5. MARK / STAMP - 'X' AND/OR INSTALL PLACARD AT BACK OF CURB.

## 5 PIPE SLEEVE

SCALE: NTS

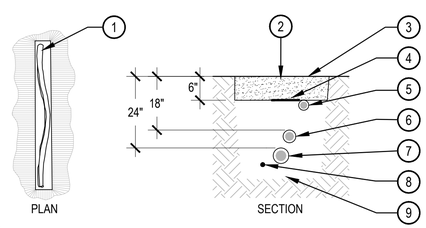


1. SNAKE PVC OR POLYETHYLENE PIPE IN TRENCH
2. EXCAVATED COVER MATERIAL (SEE NOTES)
3. FINISH GRADE
4. MAINLINE MARKING TAPE (PURPLE MARKING TAPE IF RECLAIMED)
5. POLYEHTELENE DRIP LATERAL/ DRIP PVC LATERAL PIPE (6" MIN. COVERAGE, 18" MIN. COVERAGE BELOW PEDESTRIAN WALKS.)
6. IRRIGATION LATERAL PIPE
7. IRRIGATION MAINLINE PIPE
8. VALVE WIRING
9. BEDDING MATERIAL (SEE NOTES)

NOTE:
1. ALL MAINLINES TO BE INSTALLED IN ACCORDANCE WITH MANUFACTURER' SPECIFICATIONS.
2. ALL PVC PIPING TO BE SNAKED IN TRENCHES AS SHOWN IN PLAN VIEW ABOVE.
3. ALL 120 VOLT WIRING IN CONDUIT TO BE INSTALLED AS PER LOCAL CODES.
4. ALL ELECTRICAL WIRE CONNECTIONS TO VALVES AND SPLICES TO BE INSTALLED WITHIN A VALVE BOX AND MADE WITH DBY WATERPROOF CONNECTORS, OR APPROVED EQUAL.
5. BUNDLE AND TAPE WIRING AT 10' INTERVALS
6. VALVE WIRES TO BE INSTALLED WITHIN MAINLINE TRENCH WHEREVER POSSIBLE.
7. BEDDING MATERIAL SHALL BE 1/4" MINUS SAND, AND SHALL BE 3" BELOW LOWEST PIPE OR WIRE AND 3" ABOVE HIGHEST PIPE OR WEIR WITHIN TRENCH.
8. BEDDING MATERIAL SHALL BE IN MAINLINE TRENCH ONLY.
9. BEDDING IS NOT REQUIRED IN POLYETHYLENE TUBING TRENCHES.
10. EXCAVATED COVER MATERIAL SHALL BE FREE FROM DEBRIS AND ROCKS 1/2" OR GREATER.
11. PIPE BEDDING MATERIAL TO BE ROCK AND DEBRIS FREE, BACKFILL IN 6" LIFTS, PUDDLE WITH WATER, BETWEEN LIFTS.

## 6 PIPE TRENCH

SCALE: NTS


OZ ARCHITECTURE
3003 Larimer Street
Denver, Colorado 80205
phone 303.861.5704
www.ozarch.com

NORRIS DESIGN
Planning | Landscape Architecture | Branding
409 Main Street
Suite 207
P.O. Box 2320
Frisco, CO 80443
P 970.368.7068
www.norris-design.com


# ONE RIVER RUN
75 HUNKI DORI CT.
KEYSTONE, CO 80435

PROJ. NO. 117033.00
DRAWN: ND/TA
CHECKED: ES/BR
APPROVED:
DATE: 2020/06/25

811

© OZ ARCHITECTURE

ONE RIVER RUN

ISSUED FOR:
PERMIT SET/FOR CONSTRUCTION

SHEET TITLE:
IRRIGATION DETAILS

SCALE:
SHEET NUMBER
I-301

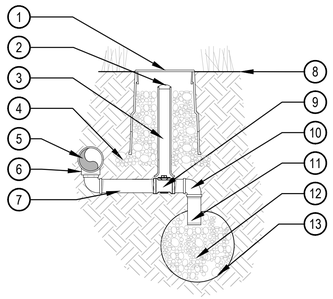

1. 10" LOCKING ROUND BOX & COVER PER SCHEDULE. TOP OF BOX TO BE FLUSH WITH FINISH GRADE.
2. 2" VALVE MARKER
3. 2" CL160 PVC ACCESS SLEEVE LENGTH AS REQUIRED.
4. 3" DEPTH 3/4" CRUSHED GRAVEL 6" BEYOND EDGE OF BOX
5. PVC PRESSURE MAIN LINE
6. SCH. 80 TEE PER MAINLINE SIZE. ALIGN IN A DOWNWARD POSITION
7. SCH. 80 PVC NIPPLE
8. FINISH GRADE
9. 1" BRONZE STOP VALVE WITH SLOTTED KEY OPERATOR
10. SCH. 80 PVC ELL
11. SCH. 80 PVC NIPPLE
12. 3/4" GRAVEL SUMP - 1 CU. FT. MIN
13. SOIL BLANKET ENCLOSING SUMP AMOCO ENG. FABRIC 4545 - 4.5 OZ. OR EQUAL

NOTE:
1. ALL THREADED CONNECTIONS SHALL BE COATED WITH TEFLON TAPE.
2. LOCATE DRAIN VALVE AT POINT OF CONNECTION AND AT ALL LOW POINT(S) ALONG THE IRRIGATION MAINLINE AS NEEDED.

## 1 MANUAL DRAIN VALVE

SCALE: NTS

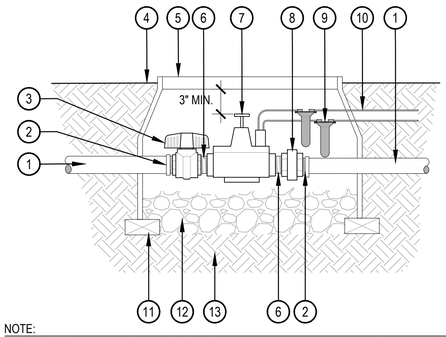


1. PVC MAINLINE
2. SCH. 80 PVC MALE ADAPTER
3. SCH. 80 PVC BALL VALVE
4. FINISH GRADE
5. LOCKING VALVE BOX
6. SCH. 80 PVC NIPPLE (THREADED)
7. MASTER VALVE
8. SCH. 80 PVC UNION (THREADED)
9. WATERPROOF ELECTRICAL CONNECTIONS
10. WIRES TO CONTROLLER
11. BRICK SUPPORTS 2 MIN.
12. 3/4" GRAVEL SUMP - 8" DEPTH
13. COMPACTED SUBGRADE

NOTE:
1. INSTALL MASTER VALVE PER MANUFACTURER'S SPECIFICATIONS FOR WIRING AND GROUNDING.

## 2 MASTER VALVE

SCALE: NTS

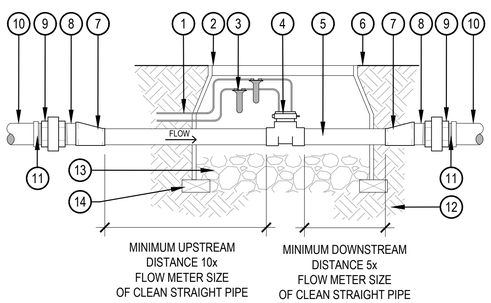


1. WIRES TO CONTROLLER
2. LOCKING VALVE BOX
3. WATERPROOF ELECTRICAL CONNECTIONS
4. FLOW SENSOR PER SCHEDULE
5. DOWNSIZED MAINLINE
6. FINISH GRADE
7. SCH. 80 PVC ECCENTRIC COUPLING (S x S) - SIZE & QTY TO BE DETERMINED IN FIELD
8. SCH. 80 PVC NIPPLE (MPTxS)
9. SCH. 80 PVC UNION (THREADED)
10. PVC MAINLINE
11. SCH. 80 PVC MALE ADAPTER
12. COMPACTED SUBGRADE
13. 3/4" GRAVEL SUMP 8" DEPTH
14. BRICK SUPPORTS 2 MIN.

NOTE:
1. INSTALL FLOW SENSOR PER MANUFACTURER'S SPECIFICATIONS FOR WIRING AND GROUNDING.

## 3 FLOW SENSOR

SCALE: NTS

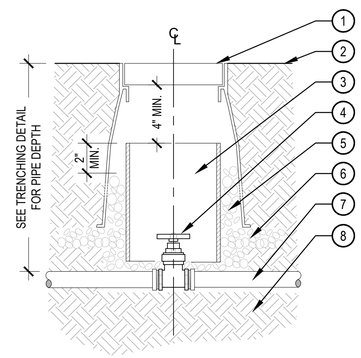


1. LOCKING ROUND BOX & COVER PER SCHEDULE. TOP OF BOX TO BE FLUSH WITH FINISH GRADE
2. FINISH GRADE
3. 8" SCH 40 PVC ACCESS SLEEVE LENGTH AS REQUIRED.
4. GATE VALVE W/ CROSS HANDLE AND SOLID WEDGE DISC PER SCHEDULE
5. 3/4" GRAVEL SUMP FILL IN AND AROUND BOX AS REQUIRED.
6. 3" DEPTH 3/4: GRAVEL EXTEND 6" BEYOND EDGE OF BOX
7. PVC MAINLINE
8. COMPACTED SUBGRADE

NOTE:
1. COMPACT SOIL AROUND GATE VALVE ASSEMBLY TO THE SAME DENSITY AS ADJACENT UNDISTURBED SUBGRADE.
2. DO NOT REST VALVE BOX OR ACCESS SLEEVES ON MAINLINE OR LATERAL LINE.
3. PROVIDE GATE VALVE KEY - LENGTH AS REQUIRED.

## 4 GATE VALVE 3" AND SMALLER

SCALE: NTS

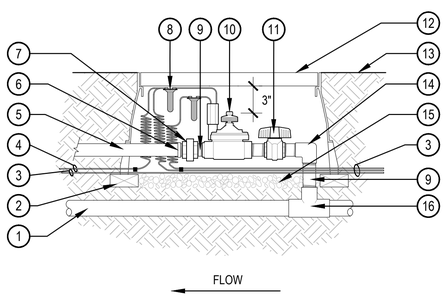


1. PVC MAINLINE
2. BRICK SUPPORT (4 MIN.)
3. CONTROL WIRE
4. COMMON WIRE TO NEXT VALVE(S)
5. PVC LATERAL
6. PVC MALE ADAPTER
7. SCH. 80 PVC UNION (THREADED)
8. WATERPROOF CONNECTORS
9. (4) SCH. 80 PVC NIPPLE/ RISER (SIZE & LENGTH VARY)
10. CONTROL VALVE
11. SCH. 80 PVC BALL VALVE
12. LOCKING VALVE BOX
13. FINISH GRADE
14. PVC ELBOW (TxT)
15. 3/4" GRAVEL SUMP - 4" DEPTH
16. PVC TEE (SxSxT)

NOTE:
1. INSTAL CONTROL VALVE PER MANUFACTURER'S RECOMMENDATIONS.

## 5 CONTROL VALVE

SCALE: NTS

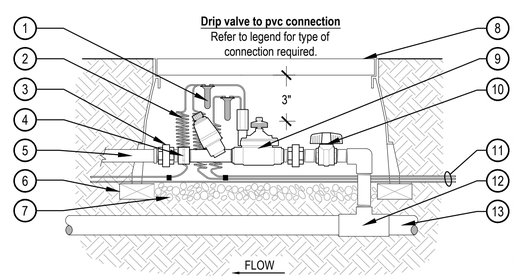


1. WATERPROOF CONNECTORS
2. 30" COIL OF WIRE MINIMUM. PLACED IN BOX.
3. (2) SCH. 80 PVC UNION (THREADED)
4. PVC COUPLING (FPTxFPT)
5. PVC LATERAL
6. BRICK SUPPORT (4 MIN)
7. 4" DEPTH GRAVEL SUMP
8. VALVE BOX PER LEGEND, FLUSH TOP OF BOX W/ GRADE
9. CONTROL VALVE PER LEGEND
10. SCH. 80 PVC BALL VALVE
11. CONTROL AND COMMON WIRES FROM CONTROLLER
12. SCH. 80 PVC TEE (SxSxT)
13. PVC MAINLINE

NOTES:
1. BUNDLE & TAPE WIRE EVERY 10 FT. SEAL WIRE ENDS WITH WATERPROOF SPLICING MATERIAL.
2. 30" MINIMUM LENGTH OF CONTROL WIRE COILED AND PLACED IN BOX AT WATER PROOF CONNECTION TO SOLENOID.
3. INSTALL DRIP CONTROL ZONE KIT PER MANUFACTURER'S SPECIFICATIONS FOR WIRING

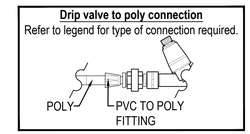


## 6 DRIP CONTROL ZONE KIT

SCALE: NTS


OZ ARCHITECTURE
3003 Larimer Street
Denver, Colorado 80205
phone 303.861.5704
www.ozarch.com

NORRIS DESIGN
Planning | Landscape Architecture | Branding
409 Main Street
Suite 207
P.O. Box 2320
Frisco, CO 80443
P 970.368.7068
www.norris-design.com


# ONE RIVER RUN
75 HUNKI DORI CT.
KEYSTONE, CO 80435

PROJ. NO. 117033.00
DRAWN: ND/TA
CHECKED: ES/BR
APPROVED:
DATE: 2020/06/25

© OZ ARCHITECTURE

ONE RIVER RUN

ISSUED FOR:
PERMIT SET/FOR CONSTRUCTION

SHEET TITLE:
IRRIGATION DETAILS

SCALE:
SHEET NUMBER
I-302

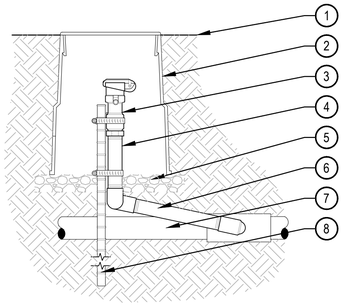


1. FINISH GRADE
2. 10" ROUND BOX & COVER PER SCHEDULE. TOP OF BOX TO FLUSH WITH FINISH GRADE
3. QUICK COUPLING VALVE W/ LOCKING COVER PER SCHEDULE
4. SCH. 80 PVC RISER (T x T)
5. 3" DEPTH $\frac{3}{4}$" GRAVEL BASE EXTEND 6" BEYOND EDGE OF BOX
6. PVC SWING JOINT
7. PVC MAINLINE
8. 24" LONG #4 REBAR TO HOLD QUICK COUPLER IN PLACE W/ (2) STAINLESS STEEL CLAMPS

NOTES:
1. EACH QUICK COUPLER SHALL BE IN A SEPARATE VALVE BOX .
2. PROVIDE (1) QUICK COUPLER KEY FOR EACH QUICK COUPLER VALVE.
3. QUICK COUPLER SHALL HAVE YELLOW LOCKING RUBBER COVER.
4. COMPACT SOIL AROUND GATE VALVE ASSEMBLY TO THE SAME DENSITY AS ADJACENT UNDISTURBED SUB-GRADE.
5. ALL THREADED CONNECTIONS SHALL BE COATED WITH TEFLON TAPE.

## 1 QUICK COUPLER

SCALE: NTS

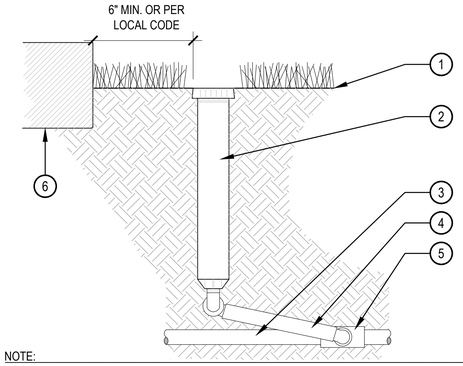


1. FINISH GRADE
2. 12" POP-UP SPRAY HEAD PER SCHEDULE
3. PVC LATERAL PIPE PER SCHEDULE
4. SWING JOINT ASSEMBLY
5. PVC SCH. 40 TEE OR ELL, (S x T)
6. WALLS, WALKS, COURTS, CURB, ETC.

NOTE:
1. AFTER FLUSHING HEADS, REGRADE AND COMPACT AS NEEDED TO RETURN TO FINISH GRADE.
2. SPRINKLERS HEAD SHALL BE LEVEL WITH SURROUNDING FINISHED GRADE.
3. ADJUST ALL SPRINKLERS HEADS SO THAT NO OVERSPRAY OCCURS ON ANY WALLS, WALKS, COURTS, ETC.
4. ALL THREADED CONNECTIONS SHALL BE COATED WITH TEFLON TAPE.
5. COMPACT SOIL AROUND HEAD TO THE SAME DENSITY AS ADJACENT UNDISTURBED SUBGRADE.

## 2 12 INCH POP-UP SPRAY

SCALE: NTS

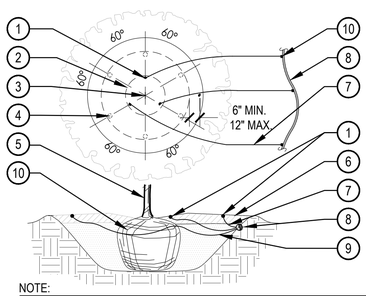


1. EMISSION POINT. DIFFUSER CAP W/ DRIP STAKE (TYP.)
2. PLANT ROOT BALL (TYP.)
3. PLANT CENTER (TYP.)
4. SECOND EMISSION POINTS SEE NOTE 3 BELOW
5. TREE TRUNK
6. MULCH LAYER
7. 1/4" DISTRIBUTION TUBING (LENGTH NOT TO EXCEED 8')
8. 3/4" POLYETHYLENE DRIP TUBING
9. SINGLE OUTLET EMITTER
10. ROOTBALL

NOTE:
1. MAXIMUM LENGTH OF ONE DISTRIBUTION TUBE SHALL BE 8'.
2. ALL EMISSION POINTS SHALL BE LOCATED ON UPHILL SIDE OF PLANT MATERIAL. ONE EMISSION POINT SHALL BE DIRECTLY TO PLANT BALL AS INDICATED. ADDITIONAL EMISSION POINTS SHALL BE WITHIN PLANT PIT PERIMETER AS DIRECTED IN THE EMITTER SCHEDULE.
3. SECOND EMISSION POINTS (IF NEEDED) AS PER THE EMITTER SCHEDULE FOR TREES WITH 3" CALIPER OR GREATER OR CONIFEROUS TREES 10' OR GREATER IN HEIGHT.
4. THIS IS A WATERING GUIDE ONLY. SITE, SOIL AND PLANT CONDITIONS VARY GREATLY. CONTRACTOR MUST OBSERVE THE PLANT MATERIAL AND MAKE ADJUSTMENTS AS NECESSARY FOR PROPER PLANT WATER REQUIREMENT.

## 3 TREE EMITTER PLACEMENT

SCALE: NTS

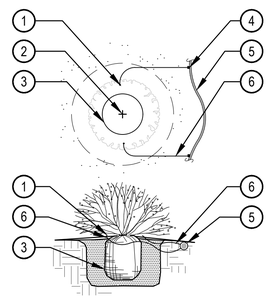


1. DIFFUSER CAP W/ DRIP STAKE
2. PLANT CENTER
3. PLANT ROOTBALL
4. SINGLE OUTLET EMITTER
5. 3/4" POLYETHYLENE DRIP TUBING
6. 1/4" DISTRIBUTION TUBING (LENGTH NOT TO EXCEED 8')

NOTE:
1. EMITTERS SHALL BE EQUALLY SPACED AROUND ROOTBALL.
2. FLUSH ALL LINES THOROUGHLY PRIOR TO EMITTER INSTALLATION.
2. IF PLANTING ON A 4:1 SLOPE OR STEEPER, INSTALL EMITTERS ON THE UPHILL SIDE OF PLANT.
3. EMITTERS SHALL BE SELF-FLUSHING PRESSURE COMPENSATING-TYPE UNLESS NOTED OTHERWISE.
4. DRIP VALVE ZONES (HYDROZONES) ARE DESIGNED TO ACCOUNT FOR DIFFERENCES IN PLANT REQUIREMENTS AND SUN EXPOSURE.
5. CONTRACTOR SHALL ENSURE HYDROZONES ARE VALVED SEPARATELY AS SHOWN ON PLAN.

## 4 SINGLE OUTLET EMITTER PLACEMENT

SCALE: NTS

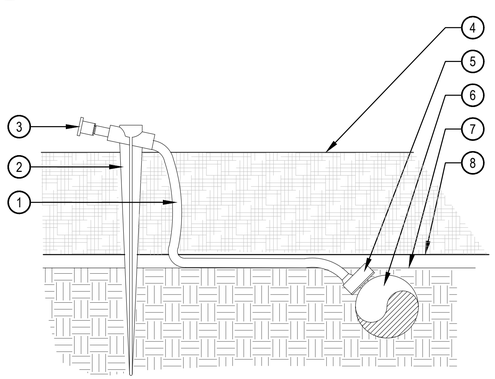


1. 1/4" DISTRIBUTION TUBING. RUN TUBING UNDER WEED BARRIER FABRIC TO PLANT. LENGTH NOT TO EXCEED 8'
2. UNIVERSAL 1/4" STAKE
3. DIFFUSER CAP
4. TOP OF MULCH
5. PRESSURE COMPENSATING EMITTER PER EMITTER SCHEDULE. INSTALL EMITTER AT 45° TO 60° ANGLE
6. 3/4" POLYETHYLENE TUBING SET WITH TOP OF TUBING FLUSH WITH FINISH GRADE OF SOIL
7. FINISH GRADE OF SOIL
8. WEED BARRIER FABRIC

## 5 SINGLE OUTLET EMITTER

SCALE: NTS

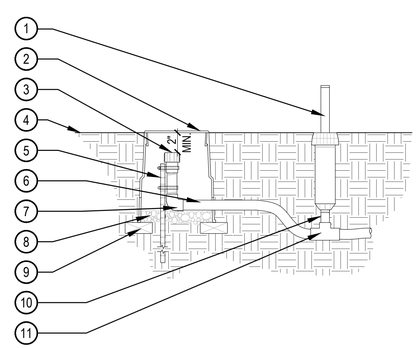


1. 6" POP-UP HEAD WITH ENCLOSED NOZZLE AND SWING PIPE. (ZONE OPERATIONAL INDICATOR)
2. LOCKING ROUND BOX & COVER PER SCHEDULE. TOP OF BOX TO BE FLUSH WITH FINISH GRADE
3. HOSE END SELF FLUSH CAP
4. FINISH GRADE
5. 24" #4 REBAR TO HOLD END CAP IN PLACE W/ (2) STAINLESS STEEL HOSE CLAMPS
6. 3/4" POLYETHYLENE DRIP TUBING
7. ELBOW COMPRESSION FITTING
8. 3/4" GRAVEL SUMP, 4" DEPTH
9. BRICK (2 REQUIRED MIN.)
10. RISER (LENGTH AS NEEDED)
11. COMPRESSION T W/ POLY TO PVC ADAPTER

NOTE:
1. COMPACT SOIL AROUND VALVE BOX TO THE SAME DENSITY AS ADJACENT UNDISTURBED SUBGRADE.
2. SECURE STAKE TO FLUSH END CAP OR PVC NIPPLE WITH A MIN. OF 2 HOSE CLAMPS.
3. ALL THREADED CONNECTIONS SHALL BE COATED WITH TEFLON TAPE.

## 6 DRIP FLUSH END CAP WITH INDICATOR

SCALE: NTS


OZ ARCHITECTURE
3003 Larimer Street
Denver, Colorado 80205
phone 303.861.5704
www.ozarch.com

NORRIS DESIGN
Planning | Landscape Architecture | Branding
409 Main Street
Suite 207
P.O. Box 2320
Frisco, CO 80443
P 970.368.7068
www.norris-design.com


ONE RIVER RUN
75 HUNKI DORI CT.
KEYSTONE, CO 80435

PROJ. NO. 117033.00
DRAWN: ND/TA
CHECKED: ES/BR
APPROVED:
DATE: 2020/06/25

© OZ ARCHITECTURE

ONE RIVER RUN

ISSUED FOR:
PERMIT SET/FOR CONSTRUCTION

SHEET TITLE:
IRRIGATION DETAILS

SCALE:
SHEET NUMBER
I-303

## PROJECT DESCRIPTION
1. Project consists of five levels above grade and one level below grade. Foundations consist of spread footings. Superstructure at level 1 is a cast in place concrete podium. Superstructure above level 1 is dovetail composite concrete slabs on pre-panelized cold formed steel bearing walls for the West, Hotel and East Buildings. Lateral systems for all buildings are reinforced concrete shear walls.
2. Specialty systems include a temporary retaining/shoring system and cold-formed steel walls and roof framing, both designed by specialty engineers/contractors.
3. This description is for general orientation only. The General Contractor is responsible for all scope items described in the drawings and project specifications as well as for all material and labor that can reasonably be inferred there from.

## GENERAL APPLICATION
1. These drawings must be used in conjunction with the architectural drawings on the project to clearly define all requirements for construction.
2. No Contractor should attempt to bid nor construct any portion of this project without consulting the project architectural, mechanical, and electrical documents.
3. All things which, in the opinion of the Contractor, appear to be deficiencies, omissions, contradictions or ambiguities in the drawings shall be brought to the attention of the Structural Engineer. Corrections or written interpretations shall be issued before affected work may proceed.
4. The Contractor shall inform the Structural Engineer, clearly and explicitly in writing of any deviation or substitution from requirements of the contract documents. Contractor shall not be relieved of any requirement of the contract documents by virtue of the Structural Engineer's review of shop drawings, project data, etc., unless the Contractor has clearly and explicitly informed the Structural Engineer in writing of any deviations or substitutions at time of submission.

## MISCELLANEOUS NOTES
1. The Contractor is solely responsible for all safety regulations, programs and precautions related to all work on this project.
2. The Contractor is solely responsible for the protection of persons and property either on or adjacent to the project and shall protect it against injury, damage, or loss.
3. Means and methods of construction and erection of structural materials are solely the Contractor's responsibility.
4. The structure is designed to function as a unit upon completion of construction of the project and then, only to support the design loads indicated. The Contractor is responsible for means, methods and sequence of construction and the adequacy of the structure to support loads occurring during construction of the project. Furnish all temporary bracing, shoring, and/or support as may be required.
5. No openings, nor any change in size, dimension or location shall be made in any structural element without written approval of the Structural Engineer.
6. Where dimensions or weights of MEP. equipment or systems are variable from manufacturer to manufacturer, verify dimensions and weights shown on drawings with selected manufacturer prior to ordering materials. Notify Structural Engineer of discrepancies.
7. Do not place equipment when shipping or operating weight exceeds weight indicated on structural drawings.
8. Openings 1'-0" or less on a side are generally not shown on the structural drawings. Refer to drawings of other consultants for such openings.
9. Openings through floors and/or roofs for passage of utilities are not located nor dimensioned on structural drawings. Contractor shall obtain and coordinate such locations and dimensions with the contractor requiring the opening.
10. Show all openings through structural members on shop drawings and submit for review. Openings not shown on structural drawings are subject to acceptance and shall be specifically indicated for review and acceptance.
11. Verify elevator pit dimensions, locations, loadings, and details with the elevator supplier prior to the fabrication and/or installation of any material.
12. Fireproofing of structural elements is not shown on the structural drawings. Refer to the specifications and architectural documents.
13. Do not scale these drawings, use the dimensions shown. In case of conflict, request clarification from Architect and Structural Engineer.
14. No structural modifications, alterations, or repairs shall be made without prior review by Structural Engineer. Submit details and calculations prepared by a professional engineer registered in state where project is located and employed by Contractor.
15. Where structure is to be used for staging or temporary storage area the Contractor shall verify that unit loads do not exceed the design loads for the structure.

## QUALITY ASSURANCE
1. The Contractor is responsible for quality assurance, including workmanship and materials furnished by subcontractors and suppliers.
2. Inspection or testing by the Owner does not relieve the Contractor of the responsibility to perform the work in accordance with the Contract Documents.
3. Workmanship: The Contractor is responsible and shall bear the cost of correcting work which does not conform to the specified requirements.
4. Correct deficient work by means acceptable to the Architect. The cost of extra work incurred by the Architect to approve corrective work shall be borne by the Contractor.

## QUALITY CONTROL
1. The Owner's Testing Agency shall perform testing and special inspections required by the structural documents, building code and the local authority. The Testing Agency shall comply with ASTM E329 and upon completion of work, the Testing Agency shall furnish a certificate of compliance, signed by the professional engineer overseeing special inspections and testing. The professional engineer must be registered and licensed in the state where the project is located.
2. The individual employed by the Testing Agency, responsible for overseeing testing and inspection of soils and foundations shall be a professional engineer practicing the discipline of geotechnical engineering, referred to as the Geotechnical Engineer in the structural portion of the construction documents. The Geotechnical Engineer is responsible for testing and inspections of soils, earthwork and foundations for conformance to the foundation design and the geotechnical report. See foundation section of the general notes.
3. See special inspections section of the general notes for required testing and inspection.

## STRUCTURAL DESIGN CRITERIA

| | | | |
|---|---|---|---|
| Building Code: 2018 International Building Code (Note 1) | | | |
| Local Jurisdiction: Summit County | | | |
| Risk Category: III | | | |
| **Wind Loading** | | | |
| Basic Wind Speed | $V_{ult}$ = 120 MPH $V_{asd}$ = 93 MPH | | |
| Exposure Category | C | | |
| $GC_{pi}$ | +/- 0.18 | | |
| Wind Base Shear - Ultimate | | | |
| West of Expansion Joist at Grid H | | | |
| East/West | 532 K | | |
| North/South | 380 K | | |
| East of Expansion Joist at Grid H | | | |
| East/West | 724 K | | |
| North/South | 537 K | | |
| Wind Design Pressure Components & Cladding - ASD | $20ft^2$ | $50ft^2$ | $100ft^2$ |
| Interior Roof Zone (Zone 1) | -35.2 PSF | -21.4 PSF | -11 PSF |
| Roof End Zone (Zone 2) | -44.3 PSF | -35.2 PSF | -28.2 PSF |
| Corner Roof Zone (Zone 3) | -52.2 PSF | -40.7 PSF | -31.9 PSF |
| Positive Roof All Zones | 10.4 PSF | 10 PSF | 10 PSF |
| Interior Wall Zone (Zone 4) | -19.8 PSF | -18.7PSF | -17.8 PSF |
| Wall End Zone (Zone 5) | -23.8 PSF | -21.5 PSF | -19.8 PSF |
| Positive Wall All Zones | 18.2 PSF | 17 PSF | 16.2 PSF |
| Parapet (3'-0" Height) | 65/-36 PSF | 52/-33 PSF | 42.3/-30.5 PSF |
| **Seismic Loading** | | | |
| Seismic Importance Factor, $I_e$ | 1.25 | | |
| Mapped Spectral Response Acceleration | | | |
| $S_S$ | 0.307 | | |
| $S_1$ | 0.079 | | |
| Site Class | C | | |
| Spectral Response Coefficients | | | |
| $S_{DS}$ | 0.266 | | |
| $S_{D1}$ | 0.079 | | |
| Seismic Design Category | B | | |
| Basic Seismic Force Resisting System | Ordinary Reinforced Concrete Shear Walls | | |
| Response Modification Factor, R | 4 | | |
| Over-Strength Factor, $\Omega_o$ | 2 | | |
| Deflection Amplification Factor, $C_d$ | 4 | | |
| Seismic Response Coefficient, $C_s$ | 0.043 | | |
| Analysis Procedure Used | Equivalent Lateral Force Analysis | | |
| Seismic Base Shear - Ultimate | | | |
| West of Expansion Joist at Grid H | | | |
| East/West | 1068 K | | |
| North/South | 1068 K | | |
| East of Expansion Joist at Grid H | | | |
| East/West | 1773 K | | |
| North/South | 1773 K | | |
| **Snow Loading** | (Notes 2,3,4,6) | | |
| Ground Snow Load, $P_g$ | 122 PSF | | |
| Minimum Flat Roof Snow Load, $P_f$ | 94 PSF | | |
| Importance Factor, $I_s$ | 1.1 | | |
| Terrain Category | C | | |
| Exposure Factor, $C_e$ | 1.0 | | |
| Thermal Factor, $C_t$ | 1.0 | | |
| Slope Factor, $C_s$ | 1.0 | | |
| **Live Loads and Superimposed Dead Loads** | (Notes 5,6) | | |
| **Foundations** | | | |
| Geotechnical Engineer Information: | John Mechling, PE | | |
| | CTL Thompson Inc. | | |
| | 234 Center Drive | | |
| | Glenwood Springs, CO 81601 | | |
| | (970) 945-2809 | | |
| | Date of Report: 06/05/2008 | | |
| Active Equivalent Fluid Pressure | 40 PSF/FT | | |
| At-Rest Equivalent Fluid Pressure | 50 PSF/FT | | |
| Passive Equivalent Fluid Pressure | 500 PSF/FT | | |
| Sliding Friction Coefficient | 0.4 | | |
| Allowable Bearing Capacity | 6,000 PSF | | |
| Minimum Frost Depth | 40 IN | | |
| Foundation Schedule Located on: | Foundation Plan Sheets | | |
| Referenced Datum | 99'-6" = Level 1 - West Tower = 9352'-6" USGS | | |

NOTES:
1. The governing building code defines the applicable edition of referenced codes and standards. Where governing building code does not define referenced codes and standards, the latest edition shall be used.
2. Ground snow load is according to the Summit County Building Department on 10/30/2019
3. Minimum flat roof snow load according to the Summit County Building Department on 10/30/2019
4. All snow loads on the structure for both flat and sloped roofs are calculated in accordance with the 2018 IBC and based on the ground snow load stated above. Roof snow loads consider the following load conditions: partial loading, unbalanced roof snow loads, snow drifting, and sliding snow
5. Minimum uniform and concentrated live loads as well as partition loads and applicable live load reductions are determined according to Section 1607 of the IBC
6. See Load Keys for numerical definition and area designation of snow, live, and other gravity loads used in design

## SPECIAL INSPECTION
1. Special inspection and testing shall be performed as required by the local jurisdiction, the building code and the construction documents. See quality assurance section of the general notes.
2. Coordinate and schedule inspection and testing prior to the start of work requiring inspection and testing while providing special inspector reasonable notice.
3. All deficiencies shall be corrected for acceptance by the testing agency.
4. Inspections performed by the local jurisdiction do not replace inspection or testing required by the owners testing agency.
5. Special inspection and testing is required for the items shown in the special inspections and testing table.

## SPECIFICATIONS
1. General Notes are not a substitute nor a replacement for the project specifications. These notes are intended as a guide to the design and/or construction requirements established for this project.

## SPECIAL INSPECTIONS AND TESTING

| Category/Material | Component/Work | Class 1 | 2 | 3 | 4 | 5 |
|---|---|---|---|---|---|---|
| Soils and Foundations | Footing Soil Bearing Material | | X | | | |
| | Slab-on-Grade Subgrade Material | | X | | | |
| | Compaction | X | X | X | | |
| | Permanent Soil Retention Elements | X | X | X | | |
| Cast-in-Place Concrete | Formwork Installation | X | | | | |
| | Reinforcing Placement | X | X | | | |
| | Post-Tension Placement | X | X | | | X |
| | Steel Embeds | X | X | | | |
| | Cast Embedded Anchors | X | X | | | |
| | Concrete Strength, Slump, Temperature, and Air Content | | X | X | | |
| | Verification of mix design use on site (prior to placement) | X | | X | | |
| | Concrete Placement | X | X | X | | |
| | Concrete Curing | | X | | | |
| | Post-Tension Stressing | | | X | | X |
| | Post-Installed Anchors in Overhead Applications | X | X | X | | |
| | All Other Post-Installed Anchors | X | X | | | |
| | Floor Flatness Survey | X | | | | |
| | Welded Reinforcing | | X | | | X |
| Structural Steel | Fabrication Facility | | | | X | X |
| | Connection Erection and Assembly | X | X | | | |
| | Bolts in Snug Tight Joints | X | X | | | |
| | Pretensioned and Slip Critical Bolts/Joints Using Turn-of-Nut with Matchmarking, DTI Washers, or twist-off-type TC bolts | X | X | | | |
| | Pretensioned and Slip Critical Bolts/Joints Using Turn-of-Nut without Matchmarking or Calibrated Wrench Methods of Installation | X | X | X | | |
| | All welds other than Complete Joint Penetrations Groove Welds | X | X | | | X |
| | Complete Penetration Groove Welds | X | X | X | | X |
| | Shear Stud Placement | X | X | | | |
| | Beam Camber at Fabrication Facility | X | | | | |
| | Galvanized Stuctural Steel Members | X | X | | | |
| Steel Decking | Deck Placement and Attachment | X | X | | | |
| Cold-Formed Steel Framing | Exterior Walls, Interior Bearing Walls and Connections | X | X | | | |
| | Joists, Trusses and Connections | X | X | | | |
| Wood Framing | Prefabricated Wood Joists and Trusses | | X | | X | |
| | Joists and Beam Framing | X | X | | | |
| | Drag Struts and Collectors | X | X | | | |
| | Floor/Roof Sheathing and Nailing | X | X | | | |
| | Hangers and Connections | X | X | | | |
| | Mechanical, Electrical, and Plumbing Penetrations | X | X | | | |

NOTES:
1. Special inspection and testing are to conform to chapter 17 of the IBC and the local building department.
2. Unless noted as continuous inspection, all inspections are periodic. Periodic inspection is defined as part-time or intermittent inspection of the work. It is the Special Inspector's responsibility to determine and coordinate the frequency and duration of the inspection relative to the Contractor's schedule and sequencing of the work in order to meet the inspection and reporting requirements.
3. Class 1: Inspection verification of size, location, quantity, and tolerance.
4. Class 2: Inspection and testing verification of strength, grade, classification, quality, density, proportions, and manufacturers certified test reports.
5. Class 3: Continuous inspection and verification of operations and conditions.
6. Class 4: Audit and inspection of fabrication facility's quality control program, and collection of facilities records during the course of fabrication for Class 2 and 3 inspections and testing.
7. Class 5: Verification of certifications

NOTES SPECIFIC TO STRUCTURAL STEEL SPECIAL INSPECTIONS:
1. Special inspection and testing shall conform to all requirements of AISC 360 Ch. N, unless noted otherwise.
2. Special inspection shall be required for all shop fabricated members, unless the fabrication facility has been approved to perform such work without special inspection by an approved agency.
3. Special inspection and testing of welding shall conform to Tables N5.4-1, N5.4-2 and N5.4-3. 100% of all CJP groove welds shall be tested by approved nondestructive test methods (NDT). Where the fabricator performs the NDT, the special inspector shall review the fabricator's NDT reports.
4. Special inspection and testing of high-strength bolting shall conform to Tables N5.6-1, N5.6-2 and N5.6-3.
5. Special inspector shall inspect exposed cut surfaces and corners of HSS members for cracks after galvanizing.

## SUBMITTALS
1. See Material sections of these General Notes for required shop drawings.
2. Submit one (1) copy of the required information (Manufacturers Data, Shop Drawings, etc) via electronic media (PDF or similar).
3. Reproducible copies of contract documents shall not be used.
4. Submittals shall be sent directly to the Architect for review and distribution.
5. Submittals shall be reviewed by Contractor and Subcontractor prior to submission. Drawings shall bear Contractor's approval stamp accepting responsibility for coordination of dimensions shown in the contract documents, quantities and coordination with other trades.
6. Allow 14 calendar days in the Structural Engineer's office for review of submittals.
7. Submittals will be returned to the Architect with Structural Engineer's review comments via electronic media.

## DEFERRED SUBMITTALS
1. Submit shop drawings along with calculations noted to be signed by a registered Engineer in the state where the project is located when required by specification. These deferred submittals (shop drawings) shall first be submitted to the project Architect and/or Engineer of record for review and coordination. Following the completion of the review and coordination by the Architect/Engineer of record; a submittal may then be made by the Contractor to the local Building Department for review and approval, which shall include a letter stating this review and coordination has been performed and completed and plans and calculations for the deferred items are found to be acceptable (e.g., with regard to geometry, load conditions, etc.) with no exceptions.
2. The list of items for deferred submittals includes the following items:
   - Pre-fabricated stair units and their connections
   - Premanufactured hand/stair railings and their connections
   - Cold-Formed Steel Studs, Joists and Trusses and connections to the structure
   - Windows washing and fall restraint systems
   - Landscaping structures (light poles, pargolas, site rails, etc...) and connections to the structure
   - All others required by the local jurisdiction

NEW SHEET = ○ REVISED DRAWING = ◑
NO MODIFICATIONS = ● SHEET DELETED = ☒

| SHEET NO. | SHEET NAME | 12.20.2019 SD | 02.06.2020 50% DD | 04.09.2020 100% DD | 06.25.2020 FOR PERMIT |
|---|---|---|---|---|---|
| S-001 | GENERAL NOTES | ○ | ◑ | ◑ | ◑ |
| S-002 | GENERAL NOTES | ○ | ◑ | ◑ | ◑ |
| S-003 | GENERAL NOTES | ○ | ◑ | ◑ | ◑ |
| S-010 | TYPICAL DETAILS | | | ○ | ◑ |
| S-011 | TYPICAL DETAILS | | | ○ | ◑ |
| S-012 | TYPICAL DETAILS | | | ○ | ◑ |
| S-013 | TYPICAL DETAILS | | | ○ | ◑ |
| S-014 | TYPICAL DETAILS | | | ○ | ◑ |
| S-015 | TYPICAL DETAILS | | | ○ | ◑ |
| S-016 | TYPICAL DETAILS | | | ○ | ◑ |
| S-017 | TYPICAL DETAILS | | | ○ | ◑ |
| S-020 | LOAD KEYS | ○ | ◑ | ◑ | ◑ |
| S-021 | LOAD KEYS | | ○ | ◑ | ◑ |
| S-022 | WIND LOAD KEY | | | | ○ |
| S-030 | GRID PLAN | ○ | ◑ | ◑ | ◑ |
| S-100 | GARAGE FLOOR PLAN - OVERALL | | | ○ | ◑ |
| S-100A | GARAGE FOUNDATION PLAN - AREA A | ○ | ◑ | ◑ | ◑ |
| S-100B | GARAGE FOUNDATION PLAN - AREA B | ○ | ◑ | ◑ | ◑ |
| S-100C | GARAGE FOUNDATION PLAN - AREA C | ○ | ◑ | ◑ | ◑ |
| S-100D | GARAGE FOUNDATION PLAN - AREA D | ○ | ◑ | ◑ | ◑ |
| S-100E | GARAGE FOUNDATION PLAN - AREA E | ○ | ◑ | ◑ | ◑ |
| S-100F | GARAGE FOUNDATION PLAN - AREA F | | | ○ | ◑ |
| S-101 | LEVEL 1 FLOOR PLAN - OVERALL | | | ○ | ◑ |
| S-101.1A | LEVEL 1 FRAMING PLAN - AREA A | ○ | ◑ | ◑ | ◑ |
| S-101.1B | LEVEL 1 FRAMING PLAN - AREA B | ○ | ◑ | ◑ | ◑ |
| S-101.1C | LEVEL 1 FRAMING PLAN - AREA C | ○ | ◑ | ◑ | ◑ |
| S-101.1D | LEVEL 1 FRAMING PLAN - AREA D | ○ | ◑ | ◑ | ◑ |
| S-101.1E | LEVEL 1 FRAMING PLAN - AREA E | ○ | ◑ | ◑ | ◑ |
| S-101.1F | LEVEL 1 FRAMING PLAN - AREA F | | | ○ | ◑ |
| S-101.2A | LEVEL 1 TOP REINFORCING PLAN - AREA A | | | | ○ |
| S-101.2B | LEVEL 1 TOP REINFORCING PLAN - AREA B | | | | ○ |
| S-101.2C | LEVEL 1 TOP REINFORCING PLAN - AREA C | | | | ○ |
| S-101.2D | LEVEL 1 TOP REINFORCING PLAN - AREA D | | | | ○ |
| S-101.2E | LEVEL 1 TOP REINFORCING PLAN - AREA E | | | | ○ |
| S-101.2F | LEVEL 1 TOP REINFORCING PLAN - AREA F | | | | ○ |
| S-101.3A | LEVEL 1 BOTTOM REINFORCING PLAN - AREA A | | | | ○ |
| S-101.3B | LEVEL 1 BOTTOM REINFORCING PLAN - AREA B | | | | ○ |
| S-101.3C | LEVEL 1 BOTTOM REINFORCING PLAN - AREA C | | | | ○ |
| S-101.3D | LEVEL 1 BOTTOM REINFORCING PLAN - AREA D | | | | ○ |
| S-101.3E | LEVEL 1 BOTTOM REINFORCING PLAN - AREA E | | | | ○ |
| S-101.3F | LEVEL 1 BOTTOM REINFORCING PLAN - AREA F | | | | ○ |
| S-101.DA | LEVEL 1 DIMENSION PLAN - AREA A | | ○ | ◑ | ◑ |
| S-101.DB | LEVEL 1 DIMENSION PLAN - AREA B | | ○ | ◑ | ◑ |
| S-101.DC | LEVEL 1 DIMENSION PLAN - AREA C | | ○ | ◑ | ◑ |
| S-101.DD | LEVEL 1 DIMENSION PLAN - AREA D | | ○ | ◑ | ◑ |
| S-101.DE | LEVEL 1 DIMENSION PLAN - AREA E | | ○ | ◑ | ◑ |
| S-101.DF | LEVEL 1 DIMENSION PLAN - AREA F | | | ○ | ◑ |
| S-102 | LEVEL 2 FLOOR PLAN - OVERALL | | | ○ | ◑ |
| S-102W | LEVEL 2 FRAMING PLAN - WEST BUILDING | ○ | ◑ | ◑ | ◑ |
| S-102H | LEVEL 2 FRAMING PLAN - HOTEL BUILDING | ○ | ◑ | ◑ | ◑ |
| S-102E | LEVEL 2 FRAMING PLAN - EAST BUILDING | ○ | ◑ | ◑ | ◑ |
| S-102.2A | LEVEL 2 REINFORCING PLAN - AREA A | | | | ○ |
| S-102.4A | LEVEL 2 BANDED PT PLAN - AREA A | | | | ○ |
| S-102.5A | LEVEL 2 UNIFORM PT PLAN - AREA A | | | | ○ |
| S-102.DW | LEVEL 2 DIMENSION PLAN - WEST BUILDING | | ○ | ◑ | ◑ |
| S-102.DH | LEVEL 2 DIMENSION PLAN - HOTEL BUILDING | | ○ | ◑ | ◑ |
| S-102.DE | LEVEL 2 DIMENSION PLAN - EAST BUILDING | | ○ | ◑ | ◑ |
| S-103 | LEVEL 3 FLOOR PLAN - OVERALL | | | ○ | ◑ |
| S-103W | LEVEL 3 FRAMING PLAN - WEST BUILDING | ○ | ◑ | ◑ | ◑ |
| S-103H | LEVEL 3 FRAMING PLAN - HOTEL BUILDING | ○ | ◑ | ◑ | ◑ |
| S-103E | LEVEL 3 FRAMING PLAN - EAST BUILDING | ○ | ◑ | ◑ | ◑ |
| S-104 | LEVEL 4 FLOOR PLAN - OVERALL | | | ○ | ◑ |
| S-104W | LEVEL 4 FRAMNG PLAN - WEST BUILDING | ○ | ◑ | ◑ | ◑ |
| S-104H | LEVEL 4 FRAMING PLAN - HOTEL BUILDING | ○ | ◑ | ◑ | ◑ |
| S-104E | LEVEL 4 FRAMING PLAN - EAST BUILDING | ○ | ◑ | ◑ | ◑ |
| S-105 | LEVEL 5 FLOOR PLAN - OVERALL | | | ○ | ◑ |
| S-105W | LEVEL 5 FRAMING PLAN - WEST BUILDING | ○ | ◑ | ◑ | ◑ |
| S-105H | LEVEL 5 FRAMING PLAN - HOTEL BUILDING | ○ | ◑ | ◑ | ◑ |
| S-105E | LEVEL 5 FRAMING PLAN - EAST BUILDING | ○ | ◑ | ◑ | ◑ |
| S-106W | LEVEL 6 FRAMING PLAN - WEST BUILDING | ○ | ◑ | ◑ | ◑ |
| S-107 | ROOF FRAMING PLAN - OVERALL | | | ○ | ◑ |
| S-107W | ROOF FRAMING PLAN - WEST BUILDING | ○ | ◑ | ◑ | ◑ |
| S-107H | ROOF FRAMING PLAN - HOTEL BUILDING | ○ | ◑ | ◑ | ◑ |
| S-107E | ROOF FRAMING PLAN - EAST BUILDING | ○ | ◑ | ◑ | ◑ |
| S-108W | ROOF LAYOUT PLAN - WEST BUILDING | | | ○ | ◑ |
| S-108H | ROOF LAYOUT PLAN - HOTEL BUILDING | | | ○ | ◑ |
| S-108E | ROOF LAYOUT PLAN - EAST BUILDING | | | ○ | ◑ |
| S-200 | CORE ELEVATIONS | | | ○ | ◑ |
| S-201 | CORE ELEVATIONS | | | ○ | ◑ |
| S-202 | CORE ELEVATIONS | | | ○ | ◑ |
| S-203 | CORE ELEVATIONS | | | ○ | ◑ |
| S-204 | CORE ELEVATIONS | | | ○ | ◑ |
| S-205 | CORE ELEVATIONS | | | ○ | ◑ |
| S-206 | CORE ELEVATIONS | | | ○ | ◑ |
| S-207 | CORE ELEVATIONS | | | ○ | ◑ |
| S-208 | CORE ELEVATIONS | | | ○ | ◑ |
| S-210 | FOUNDATION ELEVATIONS | | | ○ | ◑ |
| S-211 | FOUNDATION ELEVATIONS | | | ○ | ◑ |
| S-300 | BUILDING SECTIONS | ○ | ◑ | ◑ | ◑ |
| S-310 | PORTE COCHERE | | | ○ | ◑ |
| S-400 | PARTIAL PLAN - PODIUM POOL | | | | ○ |
| S-410.1 | PARTIAL PLANS - LEVEL 2 | | | ○ | ◑ |
| S-410.2 | PARTIAL PLANS - LEVEL 2 | | | ○ | ◑ |
| S-500 | FOUNDATION DETAILS | ○ | ◑ | ◑ | ◑ |
| S-501 | FOUNDATION DETAILS | | | ○ | ◑ |
| S-502 | CONC PILASTER DETAILS | | | | ○ |
| S-503 | CONC PILASTER DETAILS | | | | ○ |
| S-510 | CONCRETE FRAMING DETAILS | ○ | ◑ | ◑ | ◑ |
| S-511 | CONCRETE FRAMING DETAILS | | | | ○ |
| S-515 | FRAMING DETAILS | ○ | ◑ | ◑ | ◑ |
| S-516 | FRAMING DETAILS | | | | ○ |
| S-520 | ROOF FRAMING DETAILS | ○ | ◑ | ◑ | ◑ |
| S-521 | ROOF FRAMING DETAILS | | | | ○ |
| S-522 | ROOF FRAMING DETAILS | | | | ○ |
| S-530 | ROOF FRAMING DETAILS | | | | ○ |
| S-531 | ROOF FRAMING DETAILS | | | | ○ |
| S-600 | SCHEDULES | | ○ | ◑ | ◑ |
| S-605 | CONCRETE COLUMN SCHEDULE | | | | ○ |

## ABBREVIATIONS

| | |
|---|---|
| AB | anchor bolt |
| ADDNL | additional |
| AFF | above finish floor |
| ALT | alternate |
| ARCH | architectural |
| BLDG | building |
| BM | beam |
| BOT, B/, BOx | bottom of (S=slab, C=conc, etc) |
| BRG | bearing |
| BS | both sides |
| BTWN | between |
| CFS | cold-formed steel |
| CIP | cast-in-place |
| CJ | construction / control joint |
| CJP | complete joint penetration |
| CLR | clear |
| CMU | concrete masonry unit |
| COL | column |
| CONC | concrete |
| CONN | connection |
| CONST | construction |
| CONT | continuous |
| D | depth |
| DIA, ϕ | diameter |
| DIM | dimension |
| DK | deck |
| DTL | detail |
| DWGS | drawings |
| DWL | dowel |
| (E) | existing construction |
| EA | each |
| EF | each face |
| EJ | expansion joint |
| ELEV | elevation |
| EOx | edge of (S=slab, C=conc, etc) |
| EW | each way |
| EXP | expansion |
| EXT | exterior |
| FDN | foundation |
| FLR | floor |
| FOx | face of (S=slab, C=conc, etc) |
| FS | far side |
| FTG | footing |
| GA | gage |
| GB | grade beam |
| GC | general contractor |
| GEN | general |
| GLB | glulam |
| HDG | hot dip galvanize |
| HDR | header |
| HK | hook |
| HORIZ | horizontal |
| HSA | headed stud anchor |
| I/F | inside face |
| INT | interior |
| JST | joist |
| JT | joint |
| KIP, K | 1000 pounds |
| KLF | 1000 pounds per lineal foot |
| L | length |
| LAT | lateral |
| LBS | pounds |
| LLH | long leg horizontal |
| LLV | long leg vertical |
| LONG | longitudinal |
| LSL | laminated strand lumber |
| LVL | laminated veneer lumber |
| LW, LWT | lightweight |
| MAS | masonry |
| MAX | maximum |
| MECH | mechanical |
| MFR | manufacturer |
| MIN | minimum |
| MTL | metal |
| (N) | new construction |
| No | Number |
| NOM | nominal |
| NS | near side |
| NW, NWT | normal weight |
| O/F | outside face |
| OC | on center |
| OH | opposite hand |
| OPNG | opening |
| PAF | powder actuated fastener |
| PC | precast |
| PERP | perpendicular |
| PERT | pre-engineered roof truss |
| PJP | partial joint penetration |
| PL | plate |
| PLF | pounds per lineal foot |
| PSL | parallel strand lumber |
| PT | post-tensioning |
| PT | pressure treated |
| RE: | reference |
| REINF | reinforcement |
| REQD | required |
| RET | retaining |
| SC | slip critical |
| SCHED | schedule |
| SCL | structural composite lumber |
| SIP | structural insulated panel |
| SOG | slab on grade |
| SPA | spacing |
| STFNR | stiffener |
| STL | steel |
| SUBFLR | subfloor |
| T/, TOx | top of (S=slab, C=conc, etc) |
| THK | thickness |
| TL | transfer load |
| TRAN | transverse |
| TYP | typical |
| UNO | unless noted otherwise |
| VERT | vertical |
| VIF | verify in field |
| W | width |
| WP | work point |
| WWF | welded wire fabric |

### POST TENSIONED CONCRETE SLAB

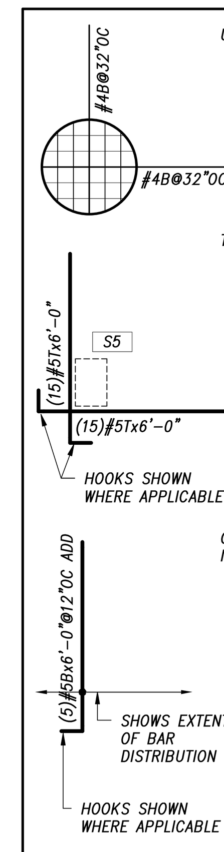


UNIFORM REINFORCING NOTATIONS:
#6 = BAR SIZE
B = BOTTOM OF SLAB POSITION
@32"OC = BAR SPACING

UNIFORM REINFORCING SHALL EXTEND THROUGHOUT EXTENTS OF SLAB, UNO

LINE INDICATES DIRECTION OF REINFORCING FOR EACH NOTATION

TOP COLUMN REINFORCING NOTATIONS
(15) = QUANTITY OF BARS
#5 = BAR SIZE
T = TOP OF SLAB POSITION
6'-0" = LENGTH OF BARS
S5 = STUDRAIL DESIGNATION
RE: STUDRAIL SCHEDULE AND DETAIL

RE: PT TYPICAL DETAIL FOR SPACING/ PLACEMENT OF REINFORCEMENT AND SEQUENCING WITH PT TENDONS

OTHER ADDITIONAL REINFORCING NOTATIONS
(5) = QUANTITY OF BARS
#5 = BAR SIZE
T = TOP OF SLAB POSITION
B = BOT OF SLAB POSITION
6'-0" = LENGTH OF BARS
@12"OC = BAR SPACING, WHEN SPACING NOT SHOWN SPACE BARS EVENLY WITHIN EXTENTS
ADD = REINFORCING BARS REQUIRED IN ADDITION TO UNIFORM AND TOP COLUMN REINFORCING

UNO, DISTRIBUTE REINFORCING EQUALLY ON EACH SIDE OF COLUMN LINE AND CENTERED IN SPAN

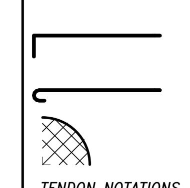

REINFORCING BAR WITH 90° HOOK

REINFORCING BAR WITH 180° HOOK

TYPICAL SUPPORTED SLAB CORNER REINFORCING, RE: TYPICAL DETAILS

TENDON NOTATIONS
6.5 = DISTANCE FROM BOTTOM OF SLAB TO TENDON CENTROID (CGS LOCATION)
2S = NUMBER OF PT STRANDS
INFLECTION POINT LOCATION = 0.2 (SPAN/2), UNO

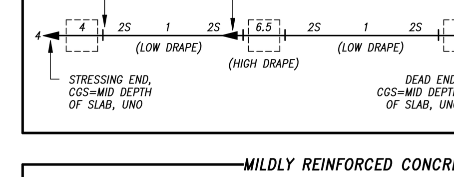


### MILDLY REINFORCED CONCRETE SLAB

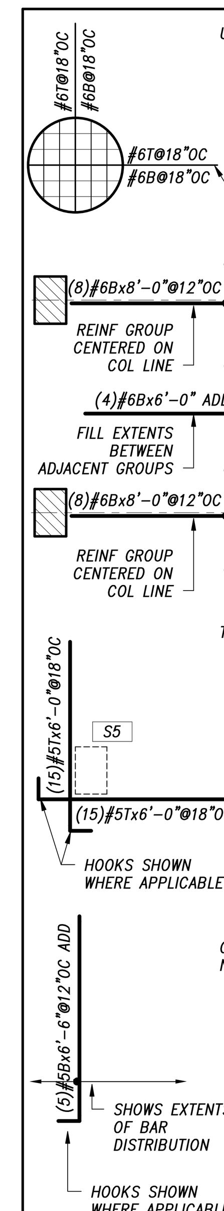


UNIFORM REINFORCING NOTATIONS
#6 = BAR SIZE
T= TOP OF SLAB POSITION
B = BOTTOM OF SLAB POSITION
@18" = BAR SPACING

UNIFORM REINFORCING SHALL EXTEND THROUGHOUT EXTENTS OF SLAB, UNO

LINE INDICATES DIRECTION OF REINFORCING FOR EACH NOTATION

ADDITIONAL REINFORCING LAYOUT:

FOR REINF WITH SPECIFIED QUANTITY AND SPACING, PLACE REINF GROUP CENTERED ON COLUMN LINE

FOR REINF WITH NO SPACING SPECIFIED, PLACE REINF GROUP TO FILL EXTENTS BETWEEN ADJACENT COLUMN LINE REINF

CENTER BOTTOM REINF IN BAY, UNO

CENTER TOP REINF OVER COLUMNS, UNO

TOP COLUMN REINFORCING NOTATIONS
(15) = QUANTITY OF BARS
#5 = BAR SIZE
T = TOP OF SLAB POSITION
6'-0" = LENGTH OF BARS
@18"OC = BAR SPACING
S5 = STUDRAIL DESIGNATION
RE: STUDRAIL SCHEDULE AND DETAIL

PLACE REINFORCEMENT GROUP CENTERED OVER COLUMN, OFFSET FROM COLUMN SHOWN FOR GRAPHICS ONLY

OTHER ADDITIONAL REINFORCING NOTATIONS:
(5) = QUANTITY OF BARS
#5 = BAR SIZE
T = TOP OF SLAB POSITION
B = BOTTOM OF SLAB POSITION
6'-0" = LENGTH OF BARS
@12" = BAR SPACING, WHEN SPACING NOT SHOWN SPACE BARS EVENLY WITHIN EXTENTS
ADD = REINFORCING BARS REQUIRED IN ADDITION TO UNIFORM AND TOP COLUMN REINFORCING

UNO, DISTRIBUTE REINFORCING EQUALLY ON EACH SIDE OF COLUMN LINE AND CENTERED IN SPAN

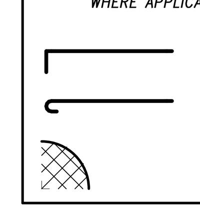

REINFORCING BAR WITH 90° HOOK

REINFORCING BAR WITH 180° HOOK

TYPICAL SUPPORTED SLAB CORNER REINFORCING, RE: TYPICAL DETAILS

### FOUNDATIONS

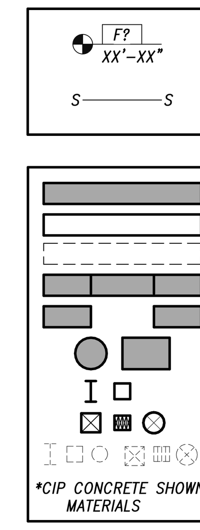


FOOTING NOTATION
F# = FOOTING TYPE RE: SCHEDULE
XX'-XX" = T/FTG ELEVATION

FOOTING / FOUNDATION STEP

### WALLS AND COLUMNS

CIP CONCRETE WALL ABOVE
COLD-FORMED STEEL WALL ABOVE
WALL BELOW (ALL MATERIALS)
WALL ABOVE W/ WINDOW *
WALL ABOVE W/ DOOR *
CIP CONCRETE COLUMN ABOVE
STEEL COLUMN ABOVE
WOOD COLUMN ABOVE
COLUMNS BELOW (ALL MATERIALS)

*CIP CONCRETE SHOWN; GRAPHICS APPLY TO OTHER WALL MATERIALS

### STEEL FRAMING

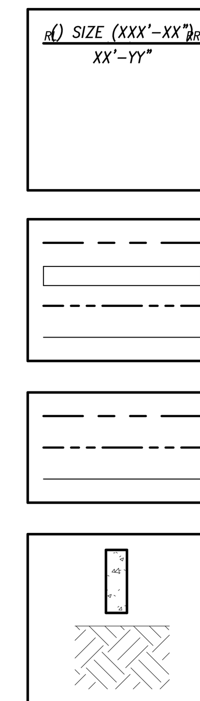


BEAM / GIRDER NOTATION
RL = REACTION LEFT (K)
SIZE = MEMBER TYPE
(XX) = # OF STUDS
Y" = CAMBER SIZE
RR = REACTION RIGHT
XX'-YY" = T/STL ELEVATION
RE: TYPICAL DETAILS FOR CONNECTION DETAILS/CAPACITIES

### WOOD FRAMING

CUSTOM TRUSS
HEAVY TIMBER FRAMING
BEAM / GIRDER
JOIST / RAFTER

### COLD-FORMED FRAMING

TRUSS
BEAM / GIRDER
JOIST

### SECTIONS AND DETAILS

CIP CONCRETE
SOIL FILL
UNDISTURBED SOIL

### PLAN KEYS AND SYMBOLS

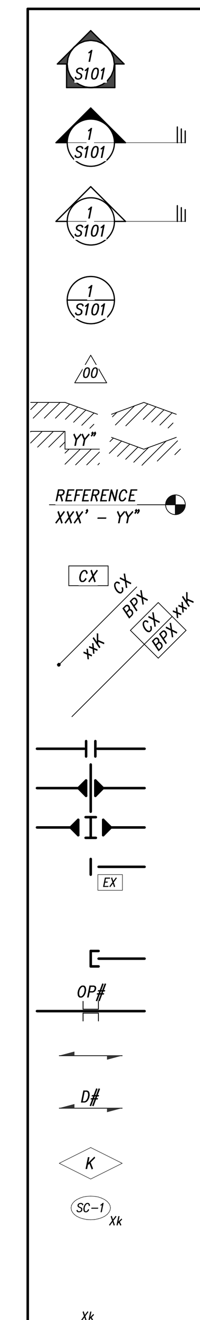


ELEVATION VIEW
1 = DRAFTING NUMBER
S101 = SHEET NUMBER

WALL / BUILDING SECTION
1 = DRAFTING NUMBER
S101 = SHEET NUMBER

SECTION CUT
1 = DRAFTING NUMBER
S101 = SHEET NUMBER

DETAIL CALL OUT
1 = DRAFTING NUMBER
S101 = SHEET NUMBER

ADDENDUM NUMBER

STEPS AND SLOPES IN DECKS & SLABS
YY" = STEP HEIGHT

ELEVATION CALLOUT
REFERENCE = T/OBJECT OR B/OBJECT
XXX'-YY" = OBJECT ELEVATION

COLUMN TYPE
CX = COLUMN TYPE, RE: SCHEDULE
BPX = BASE PLATE, RE: SCHEDULE
xxK = TRANSFER LOAD

SPLICE IN BEAM/GIRDER, RE: TYPICAL DETAILS
MOMENT CONNECTIONS THROUGH BEAM
MOMENT CONNECTIONS TO COLUMN
STEEL BEAM WITH CONCRETE EMBED, RE: TYPICAL DETAILS
EX = EMBED TYPE, WHEN TAG NOT SHOWN ON PLAN, PROVIDE TYPE REQUIRED IN TYPICAL DETAILS
STEEL BEAM WITH BEAM CONNECTION, RE: TYPICAL DETAILS
STEEL BEAM PENETRATION, RE: BEAM PENETRATION SCHEDULE
DIRECTION OF DECK SPAN OR DIRECTION OF REINFORCING
DIRECTION OF DECK SPAN
D# = DECK TYPE, RE: SCHEDULE
KEYED NOTE
K = KEYED NOTE, RE: SCHEDULE
COLLECTOR BEAM TYPE
SC-1 = COLLECTOR TYPE, RE: SCHEDULE
Xk = DESIGN AXIAL FORCE THROUGH CONNECTION
COLLECTOR FORCE
Xk = DESIGN AXIAL FORCE THROUGH CONNECTION BY OTHERS (LRFD)

### SHEET LABEL KEY

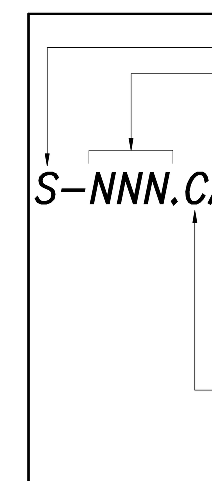


STRUCTURAL DRAWING SHEET
SHEET NUMBER
000 SERIES = GEN NOTES, LOAD KEYS AND TYP DETAILS
100 SERIES = AREA PLANS
200 SERIES = ELEVATIONS
300 SERIES = BUILDING SECTIONS
400 SERIES = ENLARGED PLANS
500 SERIES = DETAILS
600 SERIES = SCHEDULES
PLAN AREA DESIGNATION
A = AREA A
B = AREA B
C = AREA C
D = AREA D
E = AREA E
F = AREA F
CONTENT DESIGNATION
1 = FRAMING PLAN
2 = TOP REINFORCING PLAN
3 = BOTTOM REINFORCING PLAN
4 = BANDED PT PLAN
5 = UNIFORM PT PLAN
D = DIMENSION PLAN

THE STRUCTURAL ENGINEERS SEAL ON THIS DRAWING INDICATES THAT THE INFORMATION SHOWN AND THE CALCULATIONS PERTAINING TO THAT INFORMATION HAVE BEEN PREPARED BY QUALIFIED PEOPLE UNDER THE DIRECTION OF THE ENGINEER-OF-RECORD. THE SEAL DOES NOT IMPLY RESPONSIBILITY FOR INFORMATION PREPARED BY OTHERS NOR FOR ANY INFORMATION NOT SHOWN ON THIS DRAWING AND SUCH RESPONSIBILITY IS SPECIFICALLY DISCLAIMED. ON PHASED PROJECTS, DRAWINGS THAT ARE ISSUED BUT NOT SEALED SHALL BE CONSIDERED TO BE PRELIMINARY IN NATURE AND ARE ISSUED FOR INFORMATION ONLY.

THESE DRAWINGS ARE TO BE USED IN CONJUNCTION WITH THE ARCHITECTURAL DRAWINGS ON THE PROJECT TO CLEARLY DEFINE ALL OF THE REQUIREMENTS FOR THE CONSTRUCTION. WHERE CONFLICTS OCCUR CONTACT ARCHITECT FOR CLARIFICATION.

OZ ARCHITECTURE
3003 Larimer Street
Denver, Colorado 80205
phone 303.861.5704
www.ozarch.com

KL&A Engineers & Builders
421 E. 4th Street
Loveland, Colorado 80537
P: (970) 667 2426 F: (970) 667 2493
Buffalo, WY ○ Carbondale, CO ○ Golden, CO ○ Loveland, CO

© 2020 KL&A, INC

# ONE RIVER RUN
## 75 HUNKI DORI CT.
## KEYSTONE, CO 80435

PROJ. NO. 117033.00
DRAWN: KL&A
CHECKED: JLM
APPROVED: JLM
DATE: 2020-06-25

© OZ ARCHITECTURE

ONE RIVER RUN

ISSUED FOR:
Issue for Permit/Issue for Construction

SHEET TITLE:
GENERAL NOTES

SCALE: As indicated
SHEET NUMBER

S-001

C:\Revit Local Files\K1498_ORR_RVT19_DJohnson-Hazlewood.rvt
6/22/2020 5:30:50 PM

## FOUNDATIONS

GENERAL:
1. The foundations have been designed based on the design criteria and the Geotechnical Report referenced in the Structural Design Criteria section. Earthwork and foundation soil preparation shall be performed to provide soil properties meeting the design criteria.
2. The Geotechnical Engineer shall inspect and test soils, earthwork and foundations - see special inspection and quality assurance sections of the general notes. Prior to placing foundations and slabs-on-grade, obtain approval from the Geotechnical Engineer indicating earthwork and soil preparation has been performed adequately to conform to the foundation design criteria.
3. Bottom of exterior footings and walls shall bear below final exterior grade for frost protection - see structural design criteria section of the general notes.
4. Foundation walls having earth placed on each side shall have both sides filled simultaneously to maintain a common elevation.
5. Brace all foundation walls against movement while backfilling until floor slabs at the top and bottom of the wall are in place. Brace foundation walls as necessary to prevent movement and overstress due to equipment loading regardless of sequencing of top and bottom floor slabs.
6. Slab-on-grade movement is anticipated, see Geotechnical Report for magnitude of vertical movement. Isolate partition walls from slab-on-grade to allow for expected vertical movement.
7. Contractor shall provide continuous site drainage by a mechanical method to control surface and underground water as required to maintain a dry working site.
8. Foundation drainage and waterproofing is not shown or specified within the structural portion of the construction documents. Reference other portions of the construction documents for drainage, waterproofing and items associated with other disciplines.

## CAST-IN-PLACE CONCRETE

GENERAL:
1. All concrete work shall conform to ACI318 and ACI 301 and tolerances shall conform to ACI 117 unless noted otherwise. Contractor shall keep a copy of these references on site at all times.
2. Concrete Compressive Strength – See "Concrete Mix Design Requirements" table
3. Materials – See "Concrete Materials Designation" table

TESTING:
1. Tests and inspections shall be performed in compliance with ACI 301 and Chapter 17 of the IBC. See Special Inspections.
2. Concrete shall not be placed until reinforcing and embedded items have been inspected by the owner's independent inspection agency and/or the special inspector.
3. See "Special Inspections and Testing" Table.

SUBMITTALS:
1. Submittals shall conform to ACI 301 .
2. Submittals for all concrete shall include: mix designs, construction joint locations, reinforcing, embedded items, and MEP sleeves and penetrations.
3. Submittals for architecturally exposed concrete shall also include: form facing materials and mock-ups if required by the Architect.
4. Submittals for suspended concrete (suspended slabs, frames, joists, and beams) shall also include reshoring and backshoring plans and calculations. Shop drawings and calculations shall be signed and sealed by a Professional Engineer licensed in the state where the work will be done.
5. Reinforcing shop drawings shall include placement drawings 1/8"=1'-0" minimum scale complete with wall elevations and slab plans. Include special reinforcement required at openings through concrete structure. Include all accessories specified and required to support reinforcement. Detailing of reinforcing shall conform to ACISP-66.
6. Embed shop drawings shall include placement drawings 1/8"=1'-0" minimum scale locating all embed plates, anchors, and anchor bolts for structural and non-structural components attaching to concrete. Contractor is responsible for coordinating with all trades for determining the need for embeds and locations. Post installed anchors are not allowed unless approved by the structural engineer during the shop submittal process.

FORMING:
1. Unless noted otherwise, all formwork shall conform to Class B finish in accordance with ACI 117 unless noted otherwise by architectural drawings. Refer to architectural drawings for architectural finish concrete.
2. All construction joints shown on the drawings shall be incorporated into the structure unless elimination is approved by the Structural Engineer. Additional joints required to facilitate construction shall be located at points of minimum shear and shall be detailed on reinforcing shop drawings for review. Locate vertical joints in girders, beams, grade beams, joists, walls and slabs within the middle third between supports designed and detailed with dowels and keys for transfer of design shear, unless noted otherwise. Reinforcing shall pass continuously through construction joints. Where joints are shown as roughened, mechanically roughen surface to 1/4" amplitude clean and free of laitance.
3. Unless otherwise shown in the architectural drawings, provide chamfers at all columns, beams, walls, and slab edges that are exposed to view in the finished structure.
4. Unless otherwise shown in the architectural drawings, provide drip edges at the underside of all exposed slab edges.
5. Locate door openings, window openings, MEP openings, drip slots, reglets, brick ledges, curbs, and ledges per architectural drawings. For openings not dimensioned on structural drawings refer to architectural drawings.

REINFORCING AND EMBEDDED ITEMS:
1. Provide standard hooks on bars terminating at a concrete face unless noted such as at edges of openings, slab edges, expansion joints, ends of beams, and ends of walls.
2. Unless noted otherwise, provide (2) #5's at each side of openings. Extend 2'-0" beyond edges of opening.
3. Unless noted, splice continuous top and bottom bars in grade beams and walls as follows: top bars at mid-span, bottom bars over support.
4. Splice bars with class B contact laps per the reinforcing contact lap splice length table, unless noted otherwise.
5. Splice welded wire fabric by lapping one full mesh space plus 2".
6. Unless noted, provide continuous reinforcing around corners and through construction joints, control joints, contraction joints, and joints between all abutting members. Provide epoxy coated reinforcing through construction joints at garage slabs and slabs exposed to de-icers.
7. Welding of reinforcing is prohibited, unless noted otherwise and shall conform to ASTM A706.
8. Provide embeds (including anchors) for all supporting structural and non-structural elements including but not limited to hand rails, canopies, window washing davits, miscellaneous steel, bollards, etc.

## CAST-IN-PLACE CONCRETE CONT.

PLACING AND FINISHING:
1. Handling, placing, constructing, and curing shall conform to ACI 301 including placement of concrete in wet weather, cold weather, and hot weather.
2. For concrete thickness of 4'-0" or greater or when the cement content exceeds 660lb/cyd, conform to Mass Concrete of ACI 301.
3. Contractor shall furnish additional concrete due to wet concrete deflection of composite deck and support system.
4. Curing compounds should not be used on surfaces that are to receive additional concrete, paint, tile, or other material requiring a positive bond unless the contractor has demonstrated that the membrane can be satisfactorily removed before subsequent application is made, or the membrane dissipates or can serve satisfactorily as the base for the later application.
5. All concrete work shall be poured in-place unless noted otherwise. Shotcrete placement method will only be permitted if approved by the structural engineer prior to permit submittal. All requests and submittals to place concrete by the shotcrete method shall conform to ACI 506.2; including pre-production test panels for each mix proportion, shooting orientation, and nozzleman per ASTM C 1140; nozzleman grading (2.5 maximum); and test panels during production (1 per each 50yd placed, min 1 per day). Requests for shotcrete placement shall be limited to foundation walls with simple reinforcing. All pilasters or in-wall columns shall be formed and poured separately from shotcrete operations.

## EMBEDDED ITEMS IN STRUCTURAL CONCRETE SLABS

GENERAL:
1. See mechanical, electrical and plumbing (MEP) drawings for miscellaneous plates, anchors, fittings, etc. required for MEP equipment and service.
2. See architectural drawings for miscellaneous plates, bolts, reglets, slots, etc. required for architectural items.
3. Electrical conduit in PT slabs consisting of PVC, uncoated or galvanized iron, and steel are acceptable (aluminum not allowed) provided the following: conduit shall not alter or displace PT tendons and reinforcing in plan or elevation; conduit shall not be larger in outside diameter than the smaller of 1/3 of the overall thickness of slab or 1 1/2"; conduit shall be placed within the middle 1/3 of the slab; minimum spacing between parallel conduits shall be 3"; minimum horizontal distance between parallel conduit and PT tendon/ reinforcing shall be 3"; minimum vertical distance between tendon and crossing conduit shall be 2"; and crossing conduit shall consist of no more than two layers.
4. Electrical conduit in composite concrete slabs consisting of PVC, uncoated or galvanized iron, and steel is acceptable (aluminum not allowed) provided the following: maximum outside diameter is the smaller of 1" or 1/3 of the concrete thickness over the deck; minimum spacing between conduit is 18" and no crossovers occur over the deck; and minimum concrete cover is 3/4".
5. Electrical conduit in formed concrete slabs consisting of PVC, uncoated or galvanized iron, and steel are acceptable (aluminum not allowed) provided the following: conduit shall not alter or displace reinforcing in plan or elevation; conduit shall not be larger in outside diameter than the smaller of 1/3 of the overall thickness of slab or 1 1/2"; conduit shall be placed within the middle 1/3 of the slab; minimum spacing between parallel conduits shall be 3" or 3 diameters; minimum horizontal distance between parallel conduit and reinforcing shall be 3"; minimum vertical distance between reinforcing and crossing conduit shall be 2"; and crossing conduit shall consist of no more than two layers.
6. Channel and slot type embeds in slabs for support of MEP and other equipment are not allowed without prior approval of Structural Engineer.

## POST INSTALLED ANCHORS IN CONCRETE AND MASONRY

GENERAL:
1. Holes are assumed to be dry unless otherwise noted on plans.
2. Holes to be hammer drilled with bit as specified by anchor manufacturer.
3. Anchors specified are based on the specific technical data published by the specified anchor manufacturer. Substitutions are not permitted without approval by the Structural Engineer of Record prior to use. Contractor shall provide calculations demonstrating that the substituted product is capable of achieving the performance values of the specified product. Substitutions will be evaluated by their having an ICC ESR showing compliance with the relevant building code for seismic uses, load resistance, installation category, and availability of comprehensive installation instructions. Adhesive anchor evaluations consider creep, in-service temperature and installation temperature.
4. Install anchors per the manufacturer instructions, as included in the anchor packaging. Installation shall adhere to ICC ESR. Reference plans and details for anchors that are to be installed with reduced torque.
5. Concrete should be allowed to cure a minimum of 21 days prior to adhesive anchor installation.
6. Prior to installation of anchors all installation and inspection personnel shall be instructed on site by a representative of the anchor manufacturer on proper installation techniques and equipment.
7. Anchor capacity is dependent upon spacing between adjacent anchors and proximity of anchors to edge of concrete. Install anchors in accordance with spacing and edge clearances indicated on the drawings.
8. Installation of anchors shall not damage existing reinforcing, which includes post-tensioned tendons (PT). Prior to drilling, care shall be taken to avoid damage by locating existing reinforcing and PT by use of GPR, X-Ray, or other means that avoids damage to the concrete and accurately predicts potential conflict of reinforcing and PT.
9. Post-installed anchors to be stainless steel where exposed to exterior and/or corrosive environments unless the anchor is protected.
10. All installers of post-installed adhesive anchors horizontally, vertically or upwardly inclined in concrete to support sustained tension loads shall be certified by ACI/CRSI adhesive anchor installer certification program, or equivalent as required by the IBC. Submit certificates for record.
11. All post-installed anchors in concrete shall be suitable for use in cracked concrete applications.
12. When doweling continuously deformed rebar into concrete use Hilti RE-500v3 or an adhesive that has been approved under ACI 355.4 and ACI 318 for development and lap splices.
13. Unless noted otherwise on plans/details all adhesive anchors shall be Hilti HIT-HY200 Safe-Set for concrete and Hilti HY-270 for block and brick. Unless noted otherwise on plans/details all expansion anchors shall be Hilti Kwik-Bolt TZ. See note 3 for substitutions.

### CONCRETE MIX DESIGN REQUIREMENTS

| Element | f'c (psi) | Cement Type | Max W/C | Max Agg | Air Content [1,2] | Slump [3] | Exposure Class |
|---|---|---|---|---|---|---|---|
| Footings | 5000, NW | I/II | - | 3/4" | 5% | 4" | F0,C0 S0,W0 |
| Tiebeams, & Stem Walls | 4500, NW | I/II | 0.45 | 3/4" | - | 4" | F1,C0 S0,W0 |
| Foundation Walls not integral to pilasters & columns | 5000, NW | I/II | 0.45 | 3/4" | - | 4" | F0,C0 S0,W0 |
| Foundation Walls integral to pilasters or supporting concrete columns | 5000, NW | I/II | 0.45 | 3/4" | - | 4" | F0,C0 S0,W0 |
| Interior Slab-on-Grade (SOG) | 4000, NW | I/II | 0.45 | 3/4" | - | 4" | F0,C0 S0,W0 |
| Slab on Metal Deck | 5000, NW | I/II | - | 3/4" | - | 4" | F0,C0 S0,W0 |
| Exterior Slab-On-Grade Garage Slab-On-Grade | 5000, NW | I/II | 0.40 | 3/4" | 6% | 4" | F3,C0 S0,W0 |
| Columns | 5000, NW UNO[4] | I/II | 0.40 | 3/4" | - | 4" | F0,C0 S0,W0 |
| Core, Shear and Bearing Walls | 5000, NW | I/II | 0.40 | 3/4" | - | 4" | F0,C0 S0,W0 |
| PT Slab, and Non-PT Structural Slabs, Beams and Joists | 5000, NW 3750 at 3 days | I/II | 0.40 | 3/4" | - | 4" | F0,C0 S0,W0 |
| Other | 4000, NW | I/II | 0.45 | 3/4" | - | 4" | F0,C0 S0,W0 |

TABLE FOOTNOTES:
1. For any concrete exposed to freezing temperatures and moisture, the air content shall be the greater of 5%, minimum required by ACI 318, or of that shown in the table.
2. Tolerance on air content as delivered shall be +/- 1.5%.
3. Slump tolerances as follows (ACI 117)
 Specified Slump not greater than 4"= +/- 1"
 Specified Slump more than 4"= +/- 1 1/2"
 Where Slump is specified as a range= No Tolerance
 See ACI 301 for slump of concrete before addition of plasticizers or high-range water reducing admixtures
4. Refer to concrete column schedule for additional strength requirements

GENERAL CONCRETE MIX NOTES:
1. Strength (f'c) is the 28 day compressive strength at 28 days unless noted otherwise or compressive strength at the specified age.
2. Concrete is normal weight concrete unless noted otherwise. Normal weight concrete (NW) shall have a dry density of 145 ± 5 pcf unless noted otherwise. Lightweight concrete (LW) shall have a dry density of 110 ± 5 pcf.
3. Required minimum average splitting tensile strength = 6.7*√(f'c) regardless of concrete density.
4. Mix designs shall be in accordance with ACI 301.
5. Exposure Class indicates the severity of the anticipated exposure of concrete members for each exposure indicated below according to ACI 318/ACI301.
 Freeze Thaw Exposure noted thus: F0,F1,F2,F3
 Water-Soluble Sulfate in Soil Exposure noted thus: S0,S1,S2,S3
 Permeability Requirements noted thus: W0,W1
 Corrosion Protection of Reinforcement noted thus: C0, C1, C2
 Refer to ACI 301/ACI 318 for specific requirements based on the exposure category indicated in the mix design table above
6. Corrosion Protection of Reinforcement requirements (C0,C1,C2):
 Maximum water-soluble chloride ion (CL-) content in concrete, by % weight of cement
 Reinforced Concrete: C0 = 1.0 C1 = 0.3 C2 = 0.15
 Prestressed Concrete: C0 = 0.06 C1 = 0.06 C2 = 0.06
7. Where concrete is exposed to F3 freeze thaw exposure, restrictions on maximum fly ash and/or other cementitious materials apply. Refer to Table 26.4.2.2(b) in ACI 318-14 for requirements

### REQUIRED CONCRETE COVER FOR NON-FIRE-RATED ASSEMBLIES

| Assembly | | Cover (in) |
|---|---|---|
| Concrete cast against & permanently exposed to earth | | 3 |
| Concrete Exposed to Earth or Weather | #6-#18 (non-post-tensioned) | 2 |
| | #5 and smaller (Non-Post-tensioned) | 1 1/2 |
| | Post-tensioned slabs | 1[1] |
| | Post-tensioned other | 1 1/2[1] |
| Concrete not Exposed to Earth or Weather | Walls, slabs #14-#18 (Non-Post-tensioned) | 1 1/2 |
| | Walls, slabs #11 and smaller (Non-Post-tensioned) | 3/4 |
| | Columns, beams, girders (Non-Post-tensioned) | 1 1/2[2] |
| | Post-tensioned slabs | 3/4[1] |
| | Post-tensioned beams, girders | 1 1/2[3] 1[4] |

NOTES:
1. Cover for prestressed & non-prestressed reinforcement
2. Primary reinforcement, ties, stirrups, and spirals
3. Primary reinforcement
4. Ties and stirrups
5. Cover for studrails shall match cover to primary reinforcement.

### REQUIRED CONCRETE COVER FOR FIRE-RATED ASSEMBLIES

| Assembly | | Cover (in) 1 hr | 2 hr | 3 hr | 4 hr |
|---|---|---|---|---|---|
| Reinforcing Steel | Columns, beams, girders | 1 1/2 | 1 1/2 | 1 1/2 | 2 |
| | Slabs | 3/4 | 1 | 1 | 1 1/4 |
| Post-tensioned Tendons | Beams, girders 8" wide | -- | 1 3/4 | 2 | 2 1/2 |
| | Beams, girders >12" wide | -- | 1 1/2 | 1 3/4 | 2 |
| | Slabs | -- | 3/4 | 1 | 1 1/4 |

NOTES:
1. Clearances are the clearance between reinforcing and concrete surface. Unless noted otherwise in drawings, specified in-place cover shall be the greater of the appropriate not-fire-rated and the fire-rated. In-place cover shall not exceed tolerances specified in ACI 117.
2. Tabulated values for siliceous aggregate.
3. Cover for studrails shall match cover to primary reinforcement.
4. Slabs and beams are considered restrained.

### CONCRETE MATERIALS DESIGNATION

| Material | Standard |
|---|---|
| Portland Cement | ASTM C150, Type I or Type II |
| Fly Ash | ASTM C618, Class C or F |
| Aggregate | ASTM C33 |
| Water | Potable |
| Water Reducing Admixture | ASTM C494, Type A or Type D |
| High Range Water Reducing Admixture | ASTM C494, Type F or Type G |
| Accelerator Admixture | ASTM C494, Type C or Type E |
| Air Entraining Admixture | ASTM C260 |
| Lightweight Aggregates | ASTM C330 |
| Curing Compound | ASTM C309, Type I, Class A |
| Reinforcing Bars | ASTM A615-grade 60 (Specified Yield Strength = 60ksi) |
| Welded Reinforcing Bars | ASTM A706-grade 60 (Specified Yield Strength = 60ksi) |
| Epoxy Coated Reinforcing Bars | ASTM A775 or ASTM A954 |
| Post-Tensioning Tendon Assembly | ACI 423.7 |
| Post-Tensioning Prestressing Steel | ASTM A416-grade 270 |
| Welded Wire Fabric | ASTM A185 |
| Vapor Retarder below SOG | ASTM E1745-Class A |

NOTES:
1. Type III Portland cement may be used if acceptable to the Architect.

### CONCRETE REINFORCING TENSION CONTACT LAP SPLICE LENGTHS

| | | | | CONCRETE COMPRESSION STRENGTH (psi) 3,000 | 4,000 | 4,500 | 5,000 | 6,000 | 8,000 |
|---|---|---|---|---|---|---|---|---|---|
| Class A | Case #1 | Bars ≤ #6 | Top | 57 $d_b$ | 49 $d_b$ | 47 $d_b$ | 44 $d_b$ | 40 $d_b$ | 35 $d_b$ |
| | | | Other | 44 $d_b$ | 38 $d_b$ | 36 $d_b$ | 34 $d_b$ | 31 $d_b$ | 27 $d_b$ |
| | | Bars ≥ #7 | Top | 71 $d_b$ | 62 $d_b$ | 58 $d_b$ | 55 $d_b$ | 50 $d_b$ | 44 $d_b$ |
| | | | Other | 55 $d_b$ | 47 $d_b$ | 45 $d_b$ | 42 $d_b$ | 39 $d_b$ | 34 $d_b$ |
| | Case #2 | Bars ≤ #6 | Top | 85 $d_b$ | 74 $d_b$ | 70 $d_b$ | 66 $d_b$ | 60 $d_b$ | 52 $d_b$ |
| | | | Other | 66 $d_b$ | 57 $d_b$ | 54 $d_b$ | 51 $d_b$ | 46 $d_b$ | 40 $d_b$ |
| | | Bars ≥ #7 | Top | 107 $d_b$ | 92 $d_b$ | 87 $d_b$ | 83 $d_b$ | 76 $d_b$ | 65 $d_b$ |
| | | | Other | 82 $d_b$ | 71 $d_b$ | 67 $d_b$ | 64 $d_b$ | 58 $d_b$ | 50 $d_b$ |
| Class B | Case #1 | Bars ≤ #6 | Top | 74 $d_b$ | 64 $d_b$ | 60 $d_b$ | 57 $d_b$ | 52 $d_b$ | 45 $d_b$ |
| | | | Other | 57 $d_b$ | 49 $d_b$ | 47 $d_b$ | 44 $d_b$ | 40 $d_b$ | 35 $d_b$ |
| | | Bars ≥ #7 | Top | 93 $d_b$ | 80 $d_b$ | 76 $d_b$ | 72 $d_b$ | 65 $d_b$ | 57 $d_b$ |
| | | | Other | 71 $d_b$ | 62 $d_b$ | 58 $d_b$ | 55 $d_b$ | 50 $d_b$ | 44 $d_b$ |
| | Case #2 | Bars ≤ #6 | Top | 111 $d_b$ | 96 $d_b$ | 91 $d_b$ | 86 $d_b$ | 79 $d_b$ | 68 $d_b$ |
| | | | Other | 85 $d_b$ | 74 $d_b$ | 70 $d_b$ | 66 $d_b$ | 60 $d_b$ | 52 $d_b$ |
| | | Bars ≥ #7 | Top | 139 $d_b$ | 120 $d_b$ | 113 $d_b$ | 108 $d_b$ | 98 $d_b$ | 85 $d_b$ |
| | | | Other | 107 $d_b$ | 92 $d_b$ | 87 $d_b$ | 83 $d_b$ | 76 $d_b$ | 65 $d_b$ |

Where:

| | |
|---|---|
| $d_b$: | Diameter of reinforcing bar |
| Class A: | Class A tension splice |
| Class B: | Class B tension splice |
| Case #1: | Clear spacing greater than or equal to 2*$d_b$ AND cover greater than or equal to $d_b$. |
| Case #2: | Clear spacing less than 2*$d_b$ or cover less than $d_b$. |
| Top: | Where horizontal reinforcement is placed such that more than 12 inches of fresh concrete is cast below the development length or splice. |
| Other: | Other condition not satisfying Top qualification (bottom horizontal reinforcing) |

NOTES:
1. All tension splices shall be contact class B splices unless noted otherwise. Splice length shall not be less than 12 inches.
2. Splice Lengths in table are for single bar splices with maximum yield strength of 60ksi non-epoxy reinforcing bars.
3. For epoxy coated bars; zinc and epoxy coated bars; or epoxy coated wires multiply "Bot" reinforcing splice length by 1.5 and multiply "Top" reinforcing splice lengths by 1.31
4. For lightweight concrete multiply splice length by 1.33.
5. For reinforcing with a specified yield strength greater than 60ksi multiply splice length by (specified yield strength/60ksi)
6. For individual bars within a bundle lap lengths shall be multiplied by 1.33 for four-bundles and 1.20 for three bar bundles. Individual splices within a bundle shall not overlap. Entire bundle shall not be lap spliced.
7. Bars larger than #11 shall not be lap spliced. For bars larger than #11, mechanical splice shall be used. Mechanical splices shall have strength greater than or equal to 125% the yield strength of the reinforcing bar. Mechanical splices shall be staggered.
8. Where bar of different size are lap spliced in tension the minimum splice length shall be the larger of the length of a Class B tension splice of the smaller bar, or the length of a Class A tension splice of the larger bar.
9. Lap splices are not permitted where minimum clearance between reinforcing cannot be maintained.
10. Lap splice lengths shall not be less than the larger of 12 inches multiplied by all applicable multipliers or the table length multiplied by all applicable multipliers.

### CONCRETE REINFORCING COMPRESSION CONTACT SPLICE LENGTHS

| Specified Yield Strength ($f_y$) ≤ 60ksi | Specified Yield Strength ($f_y$) > 60ksi |
|---|---|
| 30$d_b$ | (0.9$f_y$ - 24)$d_b$ |

NOTES:
1. Splice length shall not be less than 12 inches.
2. $d_b$ is bar diameter
3. Compression splices permitted only when lap splice is noted in drawings as compression, otherwise see tension splice table.

### CONCRETE REINFORCING DOWEL EMBEDMENT LENGTHS

| Concrete Compression Strength | Tension Dowels Standard Hook | Tension Dowels Other | Compression Dowels |
|---|---|---|---|
| 3000psi | 22$d_b$ | Note 1 | 22$d_b$ |
| 4000psi | 19$d_b$ | Note 1 | 19$d_b$ |
| 5000psi | 17$d_b$ | Note 1 | 18$d_b$ |
| 6000psi | 16$d_b$ | Note 1 | 18$d_b$ |
| 8000psi | 14$d_b$ | Note 1 | 18$d_b$ |
| ≥ 10000psi | 12$d_b$ | Note 1 | 18$d_b$ |

NOTES:
1. Refer to " Concrete Reinforcing Tension contact Lap Splice Lengths" table for tension dowels without standard hooks. Values for Class A tension splices are permitted to be used.
2. Embedment length shall not be less than 12 inches.
3. $d_b$ is bar diameter
4. Compression dowel embedment lengths are permitted only when dowel is noted in drawings as compression, otherwise use tension embedment length.
5. Extend dowels to far edge of member UNO.

## POST TENSIONING

GENERAL:
1. All post-tensioning work, material, and fabrication shall conform to ACI 301 and ACI 423.7. Tolerances shall conform to ACI 117.
2. Installer of post-tensioning shall be PTI certified level 2.
3. All tendons anchorages shall be encapsulated. The sheathing shall be connected to all stressing, intermediate, and fixed anchorages in a watertight fashion in accordance to ACI 318.
4. Prestressing steel used in post-tension work shall conform to ASTM A416-Grade 270 1/2 inch diameter 7 wire strand.
5. Concrete shall have attained a minimum compressive strength of 75% of 28 day strength but not less than 3800 psi before post-tensioning commences.
6. Tendons are unbonded unless noted otherwise.
7. Height (or elevation) of tendons shown on the plans is measured from the supporting form surface to the center of the tendon at the location indicated.
8. Stressing sequence (Unless noted otherwise on plans): (2) uniform thru tendons at slab edge perpendicular to banded tendons at both stressing and fixed-ends, then 50% of banded thru tendons, then 100% of uniform thru tendons, then 100% of uniform add tendons, then remaining banded thru tendons, then 100% of banded add tendons.

TESTING:
1. Tests and inspections shall conform to ACI300 and ACI423.7
2. Inspectors shall be PTI certified level 2 post-tensioning inspectors.

SUBMITTALS:
1. Submittals shall include shop drawings, elongation calculations, stressing jack calculations, and stressing record specified in ACI301.
2. Shop drawings and elongation calculations shall be signed and sealed by a licensed engineer in the state where the project is located
3. Submit PTI plant certification and installer PTI certification.

## SHOTCRETE

GENERAL:
1. Shotcrete is only permitted where shown on the drawings.
2. Shotcrete shall conform to all the requirements of ACI 506.2. Unless noted otherwise, tolerance of minimum member thickness shall not be greater then 2 times the tolerance for maximum member thickness given in ACI 117. All other tolerances including minimum member thickness shall not exceed ACI117.
3. Shotcrete shall consist of a pneumatically applied concrete applied by the wet mix method. These notes cover shotcrete for below grade walls from foundation bearing elevations to top of walls at grade.
4. Shotcrete is permitted only for foundation wall below grade 12 inches or more in thickness with maximum reinforcing size of #8 and minimum spacing of 12 inches. Pilaster or columns monolithic with wall shall not be placed with shotcrete.
5. Minimum compressive strength of shotcrete shall meet minimum compressive strength as specified in the concrete section of the general notes.
6. Comply with requirements of ACI506.2 - "Specification for Materials, Proportioning, and Application of Shotcrete.
7. Reinforcing shall comply with the concrete section of the general notes.
8. Preconstruction and construction testing shall comply with ACI 506.2.
9. Submittals: Refer to the spcifications.

THE STRUCTURAL ENGINEERS SEAL ON THIS DRAWING INDICATES THAT THE INFORMATION SHOWN AND THE CALCULATIONS PERTAINING TO THAT INFORMATION HAVE BEEN PREPARED BY QUALIFIED PEOPLE UNDER THE DIRECTION OF THE ENGINEER-OF-RECORD. THE SEAL DOES NOT IMPLY RESPONSIBILITY FOR INFORMATION PREPARED BY OTHERS NOR FOR ANY INFORMATION NOT SHOWN ON THIS DRAWING AND SUCH RESPONSIBILITY IS SPECIFICALLY DISCLAIMED. ON PHASED PROJECTS, DRAWINGS THAT ARE ISSUED BUT NOT SEALED SHALL BE CONSIDERED TO BE PRELIMINARY IN NATURE AND ARE ISSUED FOR INFORMATION ONLY.

THESE DRAWINGS ARE TO BE USED IN CONJUNCTION WITH THE ARCHITECTURAL DRAWINGS ON THE PROJECT TO CLEARLY DEFINE ALL OF THE REQUIREMENTS FOR THE CONSTRUCTION. WHERE CONFLICTS OCCUR CONTACT ARCHITECT FOR CLARIFICATION.


OZ ARCHITECTURE
3003 Larimer Street
Denver, Colorado 80205
phone 303.861.5704
www.ozarch.com

KL&A Engineers & Builders
421 E. 4th Street
Loveland, Colorado 80537
P: (970) 667 2426 F: (970) 667 2493
Buffalo, WY ◦ Carbondale, CO ◦ Golden, CO ◦ Loveland, CO

© 2020 KL&A, INC

ONE RIVER RUN
75 HUNKI DORI CT.
KEYSTONE, CO 80435

PROJ. NO. 117033.00
DRAWN: KL&A
CHECKED: JLM
APPROVED: JLM
DATE: 2020-06-25

© OZ ARCHITECTURE

ONE RIVER RUN

ISSUED FOR:
Issue for Permit/Issue for Construction

SHEET TITLE:
GENERAL NOTES

SCALE: 12" = 1'-0"
SHEET NUMBER
S-002

## STRUCTURAL STEEL

GENERAL:
1. All structural steel work shall conform to AISC 360 and tolerances shall conform to AISC 303 unless noted otherwise. Contractor shall keep a copy of these references on site at all times.
2. Materials – See Steel Materials Table
3. Qualifications - Fabricator and Erector shall be experienced in fabrication and erection of projects of similar size and complexity.

TESTING:
1. Tests and inspections shall be performed in compliance with AISC 360 and Chapter 17 of the IBC. Inspections include: Welding, high strength bolting, anchor rod placement, proper use of joint details, fabricated steel, and erected steel frame. Testing includes: UT of full penetration welds, bolt tensioning procedures, shear stud bend tests.
2. See "Special Inspections and Testing" Table.

SUBMITTALS:
1. Submittals shall conform to AISC 360.
2. Submittals for structural steel shall include erection drawings, shop drawings, and mill test reports.
3. Erection drawings shall include plan drawings at 1/8"=1'-0" minimum scale complete with sections, elevations, and details as required to properly erect the structural steel frame.
4. Shop drawings shall include piece drawings which indicate cuts, connections, camber, holes, welds and dimensions as required for fabrication of the members. Part drawings are not required to be submitted unless specifically requested.

CONNECTIONS:
1. Engineer of Record (EOR) has designed all connections. If a connection design is inadvertently omitted from contract documents the contractor shall request specific connection design from the EOR.
2. Connection Design Forces: Factored LRFD values
3. Simple Beam Connections: Select connections with capacities equal to or greater than beam reactions shown on the drawings. Single sided connections shall be detailed to use the maximum number of bolt rows that can fit into the supported beam web. Double sided connections shall be detailed such that the angle or bent plate length is at least 60% of the supported beam "T" dimension.
4. HSS Cap Plates: Provide 1/4" cap plates at top of all HSS columns, uno.
5. Unframed end of wide flange beams: At the end of wide flange beams without incoming framing or other means of restraint of rotation of the beam, provide a pair of 3/8" full depth stiffeners or a 3/8" full depth end plate at the end of the beam.

BOLTS:
1. Where indicated on the drawings as slip critical and where oversized or long-slotted holes are utilized in shear, bolted joints shall be slip critical. Faying surfaces shall be prepared to meet the requirements of a Class A surface, and bolts shall be installed to the fully tensioned condition.
2. Where bolts are subject to non-static loading, are utilized to interconnect parts of a built up compression member, or all Group B fasteners loaded in tension shall be installed to the fully tensioned condition.
3. Bolts not subject to the requirements for slip critical connections and not required to be fully tensioned may be installed to the snug-tight condition.
4. A307 bolts may be used only where indicated.

WELDS:
1. Fillet Welds: Size as indicated, but not less than AISC minimum size.
2. Groove Welds: Full penetration unless noted otherwise.
3. Welds are continuous unless noted otherwise.

ACCESSORIES:
1. Headed Stud Anchors: Shop weld except where applied through metal deck or where shop installation would result in a tripping hazard.

SHOP CLEANING AND PAINTING:
1. Uncoated Steel: All steel not specifically indicated as painted steel, steel to receive spray-on-fireproofing or to be galvanized, and faying surfaces of slip critical connections shall be uncoated. Prepare surface per SSPC-SP1.
2. Primed Steel: Steel indicated to painted, with no specific paint requirements stated, shall have the surface prepared per SSPC-SP2 minimum and receive one coat of fabricator's standard rust-inhibitive primer paint applied to a minimum dry-film thickness of 1 mil.
3. Galvanized Steel: Steel indicated to be galvanized shall be cleaned, prepared, and galvanized in accordance with ASTM A123. Repair minor defects, damaged areas, and welded joints in accordance with ASTM A780. Provide vent holes as required in tube members. Provide vent hole plugs at all vertically oriented tubes.
4. Other specified coatings: Where indicated on the drawings, provide specified coating system as indicated. Clean and prepare steel as required by the specification or coating manufacture.

ERECTION:
1. No final bolting or welding shall be performed until as much of the structure which will be stiffened thereby has been properly aligned.
2. Field correction of fabrication or other errors will be permitted only when approved by the EOR. Finish gas-cut sections in accordance with AWS D1.1.

**STEEL MATERIALS DESIGNATION**

| Material | Standard |
|---|---|
| W and WT Sections | ASTM A992 (50 ksi) or<br>ASTM A572 Gr. 50 (50 ksi) |
| M, S, C, MC, L, MT, ST Sections | ASTM A36 (36ksi) |
| HP Sections | ASTM A572 Gr. 50 (50ksi) |
| Pipe | ASTM A53 Gr. B (35ksi) |
| Rectangular HSS | ASTM A500 Gr. C (50 ksi) |
| Round HSS | ASTM A500 Gr. C (46 ksi) |
| Plates, Bars, and threaded rod<br>- typical<br>- when noted as 50ksi | <br>ASTM A36 (36ksi)<br>ASTM A572 Gr. 50 (50ksi) |
| Anchor Rods | ASTM F1554 Gr. 55 w/ Supplement S1 |
| Bolts<br>- typical (Group A)<br>- where noted as Group B<br>- where indicated as A307 | <br>ASTM A325 or ASTM F1852<br>ASTM A490 or ASTM F2280<br>ASTM A307 Gr. A |
| Nuts | ASTM A563, Heavy Hex |
| Washers | ASTM F436, except plate washers to be ASTM A36 |
| Direct-Tension-Indicator Washers | ASTM F959 |
| Headed Stud Anchors | ASTM A108/A29 |
| All Thread Rod and Threaded Studs, UNO | ASTM A36 |
| High Strength Threaded Studs | ASTM A29 or A572 |
| Weld Electrodes | E70, 70ksi |

**BOLT GRADES**

| Standard | Bolt Size, Joint Type and Designation on Drawings |
|---|---|
| 3/4"ø Bolt, ASTM F3125 Grade A325 or F1852 | 3/4"ø A325 Bolt |
| 3/4"ø Bolt, ASTM F3125 Grade A325 or F1852 with Class A Faying Surface and Bolt Tightened to Slip Critical | 3/4"ø A325 SC-A Bolt |
| 1"ø Bolt, ASTM F3125 Grade A490 or F1852 | 1"ø A490 Bolt |
| 1"ø Bolt, ASTM F3125 Grade A490 or F1852 with Class A Faying Surface and Bolt Tightened to Slip Critical | 1"ø A490 SC-A Bolt |
| 1/2"ø or 3/4"ø Bolt, ASTM A307 Gr. A | 1/2"ø or 3/4"ø A307 Bolt |

NOTES:
1. Reference plan, details and connection tables for bolt size and joint type.
2. All bolts are snug tight, unless indicated on plan or details as slip critical or fully tensioned.
3. Holes may be short slotted transverse to applied load, unless plans, details or connection tables indicate a standard or oversize hole.
4. Where bolts are indicated as slip critical or fully tensioned, pretension bolt as defined by AISC 360, Table J.1
5. Class A faying surfaces are unprimed surfaces or hot dip galvanized surfaces with hand wire brush roughening, as defined by AISC 360.
6. Class B faying surfaces are blast cleaned surfaces as defined by AISC 360.
7. Bolted connections to follow all requirements indicated in the Specification for Structural Joints Using High Strength Bolts (RCSC)

## STEEL DECKING

GENERAL:
1. Composite steel floor deck shall conform to SDI-C1.0.
2. Steel roof deck shall conform to SDI-RD1.0.
3. Qualifications - Deck Manufacture shall be a member of the Steel Deck Institute.

TESTING:
1. Tests and inspections shall be performed in compliance with AISC 360 and Chapter 17 of the IBC. Inspections include: Welding, proper use of joint details.
2. See "Special Inspections and Testing" Table.

SUBMITTALS:
1. Submittals for steel deck shall include deck placement drawings.
2. Deck placement drawings shall include plan drawings at 1/8"=1'-0" minimum scale complete with details as required to properly erect the steel deck.

DECK MATERIALS:
1. Steel for Deck: minimum yield strength of 33ksi.
2. Provide all required accessories including cell closures, pour stops, ridge, and valley plates.

DECK ATTACHMENTS:
1. Weld Electrodes: E60, 60ksi unless noted otherwise. Low hydrogen electrodes not required.
2. Self-drilling self-tapping screws (Tek screws): size as indicated, zinc plated per ASTM F1941, minimum zinc thickness = 5 microns.
3. Low-velocity fasteners (shot pins): 0.145" (minimum) diameter hardened pins.
4. For composite decks, headed stud anchors may replace welds for deck attachment.
5. See plan notes and typical details for required deck attachment type and pattern.

COMPOSITE STEEL FLOOR DECK:
1. Minimum deck thickness = 20 ga.
2. Headed Stud Anchors: Provide 3/4" diameter by length indicated on plans. Weld through deck using automated welding equipment. Space studs at 12" maximum. For beams with a flange thickness of less than 0.3", studs shall be centered over the beam web.
3. Cantilever Beams: Place number of studs indicated on plan on backspan of beam only. On cantilever section, place additional studs at 12" spacing.
4. Formed Openings Through Deck: See typical details for requirements at deck openings. Deck to remain in place until opening is required. Trade requiring opening is responsible for cutting opening.
5. See architectural drawings for fire rating requirements. Provide deck stamped with appropriate UL label when required.

STEEL ROOF DECK:
1. Do not suspend point loads in excess of 50 pounds from deck. Attachments shall be spaced 8 feet apart or more, and within 2 feet of member supporting roof deck. Provide sub-framing as required for heavier point loads.
2. Formed Openings Through Deck: See typical details for requirements at deck openings. Deck to remain in place until opening is required. Trade requiring opening is responsible for cutting opening.
3. See architectural drawings for fire rating requirements. Provide deck stamped with appropriate UL label when required.

## COLD-FORMED METAL FRAMING

GENERAL:
1. All members shall be designed in accordance with the American Iron and Steel Institute (AISI) "Specification for the Design of Cold-Formed Steel Structural Members". All framing members shall be formed from galvanized steel, G60, corresponding to the requirements of ASTM A446 with the following minimum yield strengths: 12, 14, and 16 GA joists and studs: Grade D, Fy = 50ksi minimum; 18 GA and lighter: Grade A, Fy = 33ksi minimum.
2. All members shown are standard designations of Steel Stud Manufacturers Association (SSMA). Design of members indicated on structural drawings is based upon minimum member properties published by SSMA.
3. Design: See Specifications.
4. Detailing: See Specifications.
5. Manufacturer: Member of the Steel Stud Manufacturers Association (SSMA) with minimum 5 years of experience in similar work. See specifications for additional requirements.

SUBMITTALS:
1. Shop drawings shall include a scale layout of each plan area of the building and scale elevations of all walls showing panel layouts and locations, member sizes, spacing, member locations, and connections. Layouts shall be drawn to a minimum scale of 1/8" = 1'-0" unless the information presented requires a larger scale.
2. Layouts shall indicate framing locations and size of block outs for mechanical, plumbing and electrical work: panelization joints etc. and shall indicate joist and truss hangers, web stiffeners, blocking and bracing or other reinforcing required in accordance with typical details and manufacturers published standards and details.
3. Shop drawings shall be reviewed by the Contractor prior to submission. Drawings shall bear the Contractor's approval stamp accepting responsibility for dimensions, quantities, and coordination with the other trades. Shop drawings and calculations shall be signed and sealed by a Professional Engineer licensed in the state where the work will be done.

ERECTION:
1. All framing components shall be cut squarely for attachment to perpendicular members or as required for an angular fit tight against abutting members.
2. Axially loaded studs shall be pre-loaded prior to attaching to top or bottom track. Ends of axially loaded studs shall have a gap that does not exceed 1/8" between the end of the stud and the web of the top or bottom track. Provide weak-axis horizontal bracing at 48 inches maxiumum vertical spacing, both stud flanges, unless noted otherwise.
3. Where studs frame to structural floor or roof members subject to deflection from occupant live loading, either a deep leg double track or a 'Z' clip assembly shall be provided at the top runner to accommodate vertical structural movement. Failure to provide top connections capable of accommodating movement could result in crushing and buckling of the stud members and damage to architectural components or finishes.
4. Fastening of components shall be with self drilling screws or welding. Screws shall be of sufficient size to insure the strength of the connection. All welds of galvanized steel shall be touched up with a zinc rich paint. All welds of carbon sheet steel shall be touched up with paint. Wire tying of components will not be allowed.
5. Cutting of steel framing members may be done with a saw or cutting shears. Torch cutting of load bearing members is not permitted.
6. Complete, uniform, and level bearing support shall be provided for the bottom runner. At splices, where support is not common to both runners, either butt weld runners or use a stud section inserted in the runner as a splicing member attached per manufacturer's recommendations. Runner intersections shall butt evenly.
7. Studs shall be plumbed, aligned, and securely attached to both top and bottom runners. Splices in studs ARE NOT PERMITTED. Temporary bracing, where required, shall be provided until erection is completed.
8. Where manufacturer's recommendations for erection, attachment, assembly, bracing, alignment, or other installation or assembly requirements are more stringent than indicated in these drawings or the Project Specifications, the manufacturer's recommendations shall apply.

**EQUIVALENT THICKNESS FOR VARIOUS SHEET METAL GAGES**

| Gage | Minimum Design Thickness | |
|---|---|---|
| 25 | 0.0188" | 18 mils |
| 22 | 0.0283" | 27 mils |
| 20 | 0.0346" | 33 mils |
| 18 | 0.0451" | 43 mils |
| 16 | 0.0566" | 54 mils |
| 14 | 0.0713" | 68 mils |
| 12 | 0.1017" | 97 mils |

## WOOD FRAMING

GENERAL:
1. All wood construction work shall conform to ANSI/AF&PA NDS unless noted otherwise. Contractor shall keep a copy of these references on site at all times.
2. Materials – See Wood Materials Tables
3. Qualifications – Carpenter shall be experienced in construction of projects of similar size and complexity and shall be knowledgeable of conventional light frame construction practices and minimum nailing requirements of the IBC.

SUBMITTALS:
1. All submittals shall be reviewed by the Contractor prior to Engineer/Architect review and shall bear Contractor's review stamp. Contractor is responsible for reviewing submittals for conformance with all contract documents and coordination with all trades.
2. Submittals are required for the following wood framing elements: premanufactured wood trusses, heavy timber framing, log framing, glulam framing, and manufactured framing including I-joists and open web joists.
3. Heavy timber submittals shall include shop drawings for trusses including connection material and details.
4. Log framing submittals shall include shop drawings for trusses including connection material and details.
5. Glulam framing submittals shall include shop drawings for trusses including connections.
6. Manufactured framing submittals shall include dimensioned layout plans indicating joist and beam types, locations, and connection hardware.

PRODUCTS:
1. All wood framing shall be at a moisture content of 19% or less and shall be marked S-Dry (surface dried) or KD (kiln dried).
2. Unless noted otherwise, all sizes noted on these drawings are nominal. Actual sizes are based on "Minimum Dressed-Dry" dimensions according to American Softwood and Lumber Standard PS20-10.
3. Unless noted otherwise, all glulam framing sizes are minimum dressed dimensions in accordance with American Institute of Timber Construction AITC113.
4. Unless noted otherwise, all manufactured framing sizes are based on specified manufacturers published information.
5. Structural Panels: Sheathing for roofs and walls shall conform to APA PS-2 standards. All panels shall be Exposure 1, unless noted otherwise.

HEAVY TIMBER FRAMING:
1. General: sound, thoroughly seasoned, and free of warp or significant surface defects.
2. Material: see table and plans for species and grade.
3. For large members (12" nominal or greater maximum dimension), box heart members may be used. For smaller members, free of heart center timbers may be used. Do not use timber with excessive reaction or juvenile wood.
4. Moisture Content: Provide timber with 15% average moisture content at time of dressing. Use a nominal 10x10 timber for determining baseline average moisture content throughout the cross section. Variation in moisture content from the center to the edge of the timber shall not exceed 8%.
5. End Sealer: Manufacturer's standard, transparent, colorless wood sealer effective in retarding transmission of moisture at cross-grain cuts and compatible with finish.
6. Exposed framing shall be appearance grade; reference architectural drawings for finish requirements.

CONNECTORS:
1. All bolts, metal connectors, hangers, anchors, and fasteners in contact with preservative treated wood shall be hot dipped galvanized [G90 or G185] or stainless steel type 304 or 316.
2. Nailing shall conform to the minimum requirements contained in Table 2304.10.1 of the IBC unless more stringent requirements are shown on these drawings or in these notes.
3. All nails are to be steel common wire nails and conform to ASTM F1667.
4. Pre-drill nail holes when necessary to prevent splitting.
5. Steel plates for wood construction shall conform to ASTM A36.
6. Bolts shall conform to ASTM A307.
7. All exposed bolts in wood structure which are not in contact with preservative treated wood shall be plain, uncoated steel.
8. Holes for bolts shall be 1/16" oversized.
9. Retighten all bolts prior to closing in.
10. Lag screws shall penetrate the main member a minimum of eight times the shaft diameter unless noted otherwise.
11. Diagonal (toe-nail) lag screws shall be installed with a minimum edge distance of four times the shaft diameter.

INSTALLATION:
1. Built-up Columns: Where hidden in a wall, at contractor's option, wood columns may be built-up from 2x laminations. Laminations shall be stitched nailed with staggered 16d@4"OC. Do not splice laminations.
2. Truss rods and connections shall be tightened after installation and leveling.
3. At roofs and floors, lay panels with long dimension perpendicular to supports with short edges staggered.

FRAMING TOLERANCES:
1. Layout of walls and partitions: within 1/4" of intended position.
2. Plates and runners: 1/4" in 8' from a straight line.
3. Studs: 1/4" in 8' out of plumb, not cumulative.
4. Face of framing: 1/4" in 8' from a true plane.

**COMMON NAIL DIMENSIONS**

| Common Nail (Steel Wire) | Minimum Diameter (in) | Minimum Length (in) |
|---|---|---|
| 6d | 0.113 | 2 |
| 8d | 0.131 | 2 1/2 |
| 10d | 0.148 | 3 |
| 12d | 0.148 | 3 1/4 |
| 16d | 0.162 | 3 1/2 |
| 20d | 0.192 | 4 |

**DESIGN VALUES FOR GLUE-LAMINATED TIMBER**

| Member Type | Combo Symbol | Flexural Stress (Top) | Flexural Stress (Bottom) | Compressive Stress | Horizontal Shear Stress | Modulus of Elasticity ($E_x$) | Modulus of Elasticity ($E_{x,min}$) |
|---|---|---|---|---|---|---|---|
| Cont Beams, Cantilevers | 24F-V8 | 2,400 psi | 2,400 psi | 1,650 psi | 265 psi | 1,800 ksi | 950 ksi |
| Simple Beams | 24F-V4 | 1,850 psi | 2,400 psi | 1,650 psi | 265 psi | 1,800 ksi | 950 ksi |
| Columns | 2 | 1,700 psi | 1,700 psi | 1,950 psi | 265 psi | 1,600 ksi | 850 ksi |

**DESIGN VALUES FOR WOOD DECKING**

| Species & Grade | Flexural Stress | Compressive Stress Perpendicular | Modulus of Elasticity |
|---|---|---|---|
| DOUGLAS FIR-LARCH (DFL) | | | |
| Select | 1,750 psi | 625 psi | 1,800 ksi |
| Commercial | 1,450 psi | 625 psi | 1,700 ksi |
| WESTERN CEDAR (WC) | | | |
| Select | 1,250 psi | 425 psi | 1,100 ksi |
| Commercial | 1,050 psi | 425 psi | 1,000 ksi |
| SOUTHERN PINE (SP) | | | |
| Select | 1,400 psi | 565 psi | 1,600 ksi |
| Commercial | 1,400 psi | 565 psi | 1,600 ksi |

**WOOD STRUCTURAL PANEL REQUIREMENTS**

| Supporting Element | APA Span Rating | Minimum Thickness |
|---|---|---|
| Floors (Sturd-I T&G) | 24 OC Single Floor | 23/32" |

THE STRUCTURAL ENGINEERS SEAL ON THIS DRAWING INDICATES THAT THE INFORMATION SHOWN AND THE CALCULATIONS PERTAINING TO THAT INFORMATION HAVE BEEN PREPARED BY QUALIFIED PEOPLE UNDER THE DIRECTION OF THE ENGINEER-OF-RECORD. THE SEAL DOES NOT IMPLY RESPONSIBILITY FOR INFORMATION PREPARED BY OTHERS NOR FOR ANY INFORMATION NOT SHOWN ON THIS DRAWING AND SUCH RESPONSIBILITY IS SPECIFICALLY DISCLAIMED. ON PHASED PROJECTS, DRAWINGS THAT ARE ISSUED BUT NOT SEALED SHALL BE CONSIDERED TO BE PRELIMINARY IN NATURE AND ARE ISSUED FOR INFORMATION ONLY.

THESE DRAWINGS ARE TO BE USED IN CONJUNCTION WITH THE ARCHITECTURAL DRAWINGS ON THE PROJECT TO CLEARLY DEFINE ALL OF THE REQUIREMENTS FOR THE CONSTRUCTION. WHERE CONFLICTS OCCUR CONTACT ARCHITECT FOR CLARIFICATION.


OZ ARCHITECTURE®

3003 Larimer Street
Denver, Colorado 80205
phone 303.861.5704
www.ozarch.com

KL&A Engineers & Builders
421 E. 4th Street
Loveland, Colorado 80537
P: (970) 667 2426 F: (970) 667 2493
Buffalo, WY ◦ Carbondale, CO ◦ Golden, CO ◦ Loveland, CO



© 2020 KL&A, INC


# ONE RIVER RUN
75 HUNKI DORI CT.
KEYSTONE, CO 80435

PROJ. NO. 117033.00
DRAWN: KL&A
CHECKED: JLM
APPROVED: JLM
DATE: 2020-06-25


© OZ ARCHITECTURE


ONE RIVER RUN

ISSUED FOR:
Issue for Permit/Issue for Construction

SHEET TITLE:
GENERAL NOTES

SCALE: 12" = 1'-0"
SHEET NUMBER

S-003


C:\Revit Local Files\K1498_ORR_RVT19_DJohnson-Hazlewood.rvt
6/22/2020 4:47:17 PM

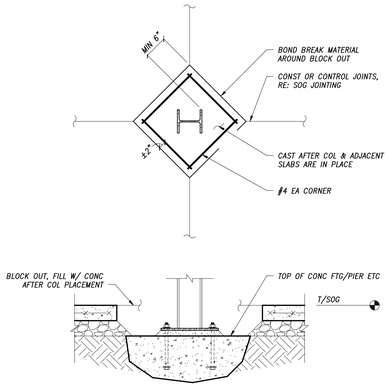


## 15 TYPICAL SLAB-ON-GRADE BLOCKOUT AT STEEL COLUMNS

NTS

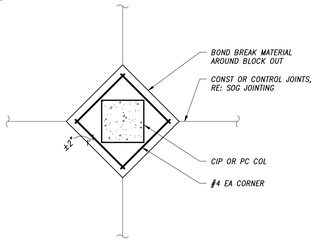


## 14 TYPICAL SLAB-ON-GRADE BLOCKOUT AT CONCRETE COLUMNS

NTS

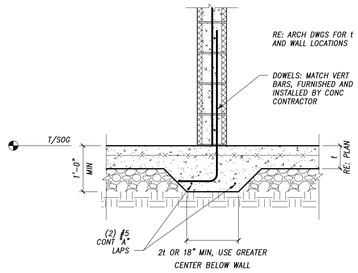


## 11 TYPICAL THICKENED SLAB-ON-GRADE AT MASONRY

NTS

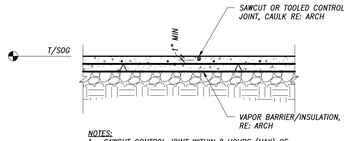


NOTES:
1. SAWCUT CONTROL JOINT WITHIN 8 HOURS (MAX) OF PLACEMENT OR USE TOOLED JOINT DURING FINISHING (CONTRACTOR'S OPTION)
2. PROVIDE CONTROL JOINTS AT 15 FT OC EACH WAY MAXIMUM SPACING, UNO. CONSTRUCTION JOINTS CAN REPLACE CONTROL JOINTS.

TYPICAL SOG CONTROL JOINT

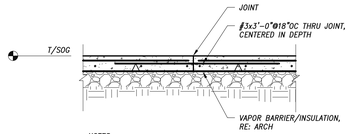


NOTES:
1. STOP REINF AT EACH SIDE OF CONSTRUCTION JOINT
2. PROVIDE CONTROL JOINTS AT 15 FT OC EACH WAY MAXIMUM SPACING, UNO. CONSTRUCTION JOINTS CAN REPLACE CONTROL JOINTS.
3. UNO AT GARAGES, REINFORCING PASSING THROUGH CONSTRUCTION JOINTS SHALL BE EPOXY COATED.

TYPICAL SOG CONSTRUCTION JOINT

## 8 TYPICAL SLAB-ON-GRADE JOINTING

NTS

TYPICAL DETAIL SHEET NOTES
1. It is the contractor's responsibility to understand the typical details on this sheet and apply them as needed on the project.
2. Typical details on this sheet are generally not referenced from any other drawing on the project.
3. Typical details on this sheet MAY be referenced on plans or details to clarify or identify a particular condition. The presence of such a reference does not alter the obligation of the contractor to apply the detail(s) as needed even if they are not referenced.

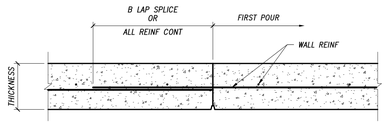


NOTES:
1. LOCATION OF CONSTRUCTION JOINTS IN WALLS: SUPPORTED ON CONTINUOUS FOOTINGS AT CONTRACTOR OPTION.
2. LOCATE CONSTRUCTION JOINTS IN WALLS ACTING AS GRADE BEAMS AT POINT OF MINIMUM SHEAR, GENERALLY AT MIDDLE THIRD OF SPANS.

## 4 TYPICAL WALL CONSTRUCTION JOINT SINGLE MAT OF REINFORCING

NTS

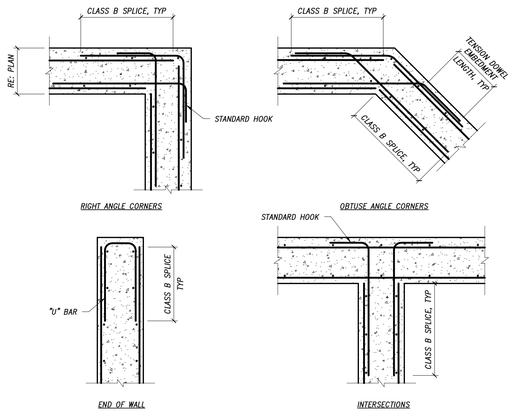


NOTES:
1. DOWELS AND CORNER BARS MATCH HORIZONTAL REINF EXCEPT USE #5 DOWELS & CORNER BARS FOR HORIZONTAL BARS #6 AND LARGER
2. SEQUENCING OF VERTICAL AND HORIZONTAL REINFORCING PER DETAILS CUT ON PLAN, UNO

## 10 TYPICAL WALL AND GRADE BEAM CORNER REINFORCING DOUBLE MAT OF REINFORCING

NTS

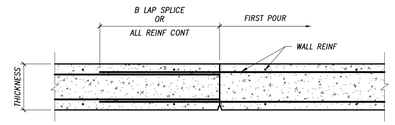


NOTES:
1. LOCATION OF CONSTRUCTION JOINTS IN WALLS: SUPPORTED ON CONTINUOUS FOOTINGS AT CONTRACTOR OPTION.
2. LOCATE CONSTRUCTION JOINTS IN WALLS ACTING AS GRADE BEAMS AT POINT OF MINIMUM SHEAR, GENERALLY AT MIDDLE THIRD OF SPANS.

## 7 TYPICAL WALL CONSTRUCTION JOINT DOUBLE MAT OF REINFORCING

NTS

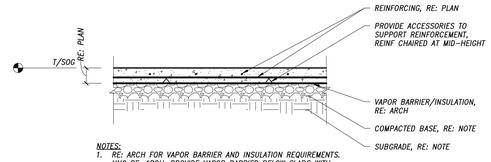


NOTES:
1. RE: ARCH FOR VAPOR BARRIER AND INSULATION REQUIREMENTS. UNO RE: ARCH: PROVIDE VAPOR BARRIER BELOW SLABS WITH FLOOR FINISHES SUSCEPTIBLE TO MOISTURE.
2. SOG SHALL BEAR ON SUITABLE SUBGRADE MATERIAL AS SPECIFIED BY THE GEOTECHNICAL ENGINEER & GEOTECHNICAL REPORT.
3. PROVIDE MIN 4" FREE DRAINAGE COMPACTED BASE TYPICAL UNO BY GEOTECHNICAL ENGINEER & GEOTECHNICAL REPORT.

## 3 TYPICAL SLAB-ON-GRADE

NTS

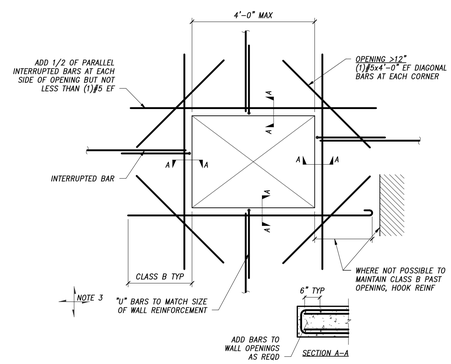


NOTES:
1. RE: WALL ELEVATIONS OR PLANS FOR REINFORCEMENT AT LARGER OPENINGS.
2. CLUSTERS OF SMALL HOLES WHOSE OVERALL MEASUREMENT EXCEEDS 1'-0" SHOULD BE REINFORCED AS ONE OPENING.
3. WALLS CAN SPAN IN EITHER DIRECTION.
4. FOR SINGLE MESH WALLS CENTER REINF IN WALL & HOOK BARS AROUND OPENING W/ 180 DEG HOOK.

## 6 TYPICAL WALL OPENING REINFORCING

NTS

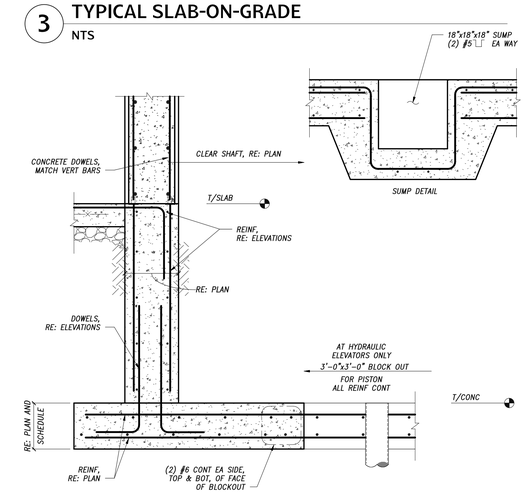


## 2 ELEVATOR PIT DETAIL

NTS

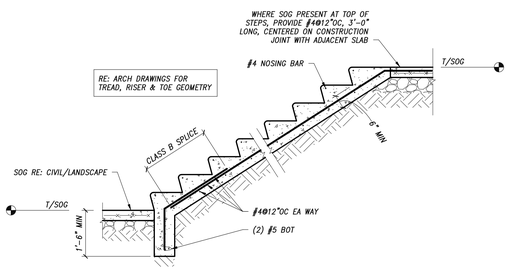


## 13 TYPICAL THICKENED SLAB-ON-GRADE AT STAIR

NTS

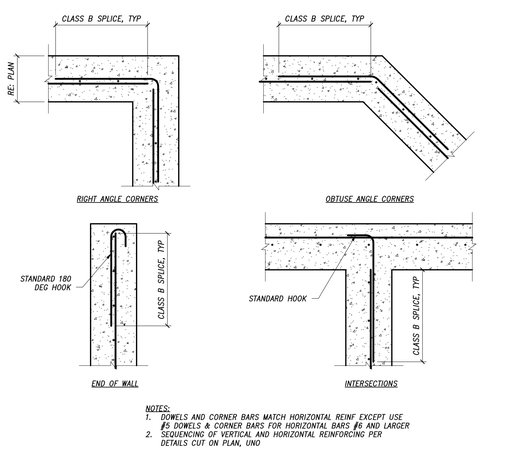


NOTES:
1. DOWELS AND CORNER BARS MATCH HORIZONTAL REINF EXCEPT USE #5 DOWELS & CORNER BARS FOR HORIZONTAL BARS #6 AND LARGER
2. SEQUENCING OF VERTICAL AND HORIZONTAL REINFORCING PER DETAILS CUT ON PLAN, UNO

## 9 TYPICAL WALL AND GRADE BEAM CORNER REINFORCING SINGLE MAT OF REINFORCING

NTS




## 12 TYPICAL SLAB-ON-GRADE STAIR

NTS

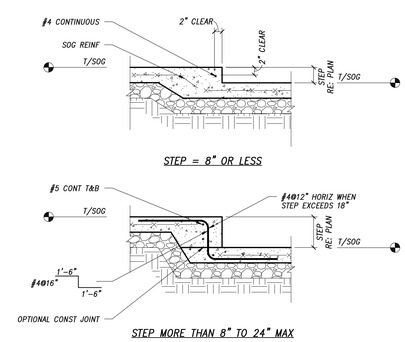


## 5 TYPICAL SLAB-ON-GRADE STEPS

NTS

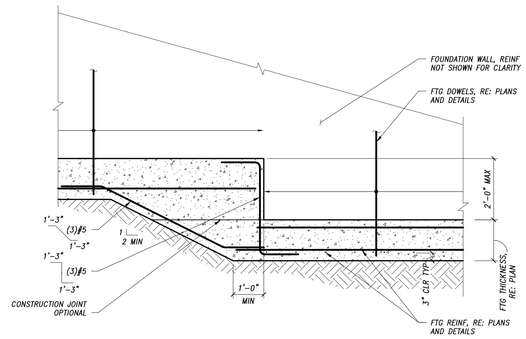


## 1 TYPICAL FOOTING STEP DETAILS

NTS

THE STRUCTURAL ENGINEER'S SEAL ON THIS DRAWING INDICATES THAT THE INFORMATION SHOWN AND THE CALCULATIONS PERTAINING TO THAT INFORMATION HAVE BEEN PREPARED BY QUALIFIED PEOPLE UNDER THE DIRECTION OF THE ENGINEER-OF-RECORD. THE SEAL DOES NOT IMPLY RESPONSIBILITY FOR INFORMATION PROVIDED BY OTHERS AND SHOWN ON THIS DRAWING NOT FOR THAT INFORMATION NOT SHOWN ON THIS DRAWING AND ONE ISSUED FOR INFORMATION ONLY.

THESE DRAWINGS ARE TO BE USED IN CONJUNCTION WITH THE ARCHITECTURAL DRAWINGS ON THE PROJECT TO CLEARLY DEFINE ALL OF THE REQUIREMENTS FOR THE CONSTRUCTION. WHERE CONFLICTS OCCUR CONTACT ARCHITECT FOR CLARIFICATION.


OZ ARCHITECTURE
3003 Larimer Street
Denver, Colorado 80205
phone 303.861.5704
www.ozarch.com

KL&A Engineers & Builders
475 S. 4th Street
Louisville, Colorado 80027
Phone: 303.673.9700 Fax: (970) 667.2493
Aspen, CO • Carbondale, CO • Glenwood Springs, CO • Louisville, CO


© 2020 KL&A, INC

# ONE RIVER RUN
## 75 HUNKI DORI CT.
## KEYSTONE, CO 80435

PROJ. NO. 117033.00
DRAWN: KL&A
CHECKED: JLM
APPROVED: JLM
DATE: 2020-06-25

© OZ ARCHITECTURE

ONE RIVER RUN

ISSUED FOR:
Issue for Permit/Issue for Construction

SHEET TITLE:
TYPICAL DETAILS

SCALE: As indicated
SHEET NUMBER
S-010

C:\Revit\Local Files\K1498_ORR_RVT19_DJohnson-Hazlewood.rvt
6/22/2020 4:47:20 PM

TYPICAL DETAIL SHEET NOTES
1. It is the contractor's responsibility to understand the typical details on this sheet and apply them as needed on the project.
2. Typical details on this sheet are generally not referenced from any other drawing on the project.
3. Typical details on this sheet MAY be referenced on plans or details to clarify or identify a particular condition. The presence of such a reference does not alter the obligation of the contractor to apply the detail(s) as needed even if they are not referenced.

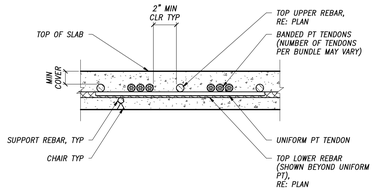


## 11 TYPICAL PT SLAB SECTION THROUGH BANDED TENDON AT COLUMN
NTS

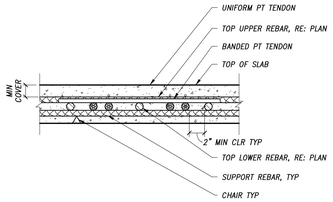


## 10 TYPICAL PT SLAB SECTION THROUGH DISTRIBUTED TENDON AT COLUMN
NTS

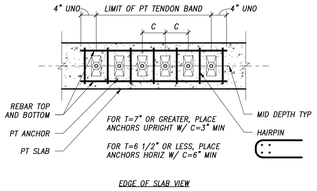


## 9 TYPICAL PT SLAB REINFORCEMENT OF TENDON BAND AT SLAB EDGE AND INTERMEDIATE STRESSING
NTS

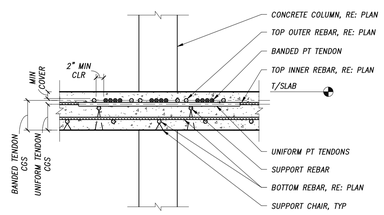


## 8 TYPICAL PT SLAB SECTION THROUGH BANDED TENDON AT COLUMN
NTS

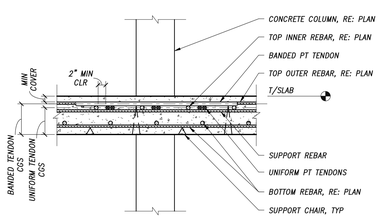


## 7 TYPICAL PT SLAB SECTION THROUGH DISTRIBUTED TENDON AT COLUMN
NTS

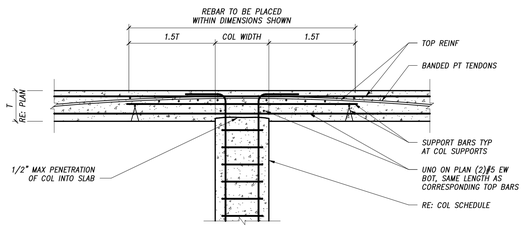


## 6 TYPICAL PT ROOF SLAB AT COLUMN
NTS

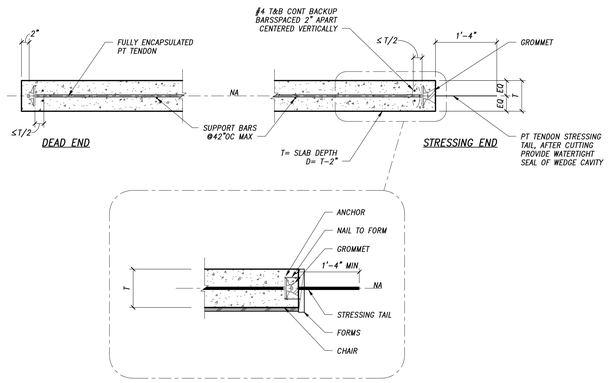


## 5 TYPICAL PT SLAB DISTRIBUTED TENDON ENDS
NTS

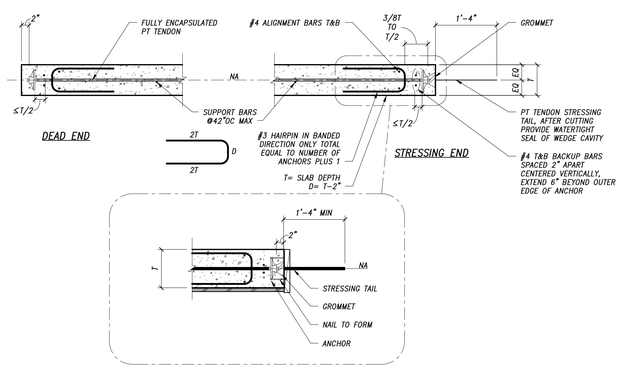


## 4 TYPICAL BANDED PT SLAB TENDON ENDS
NTS

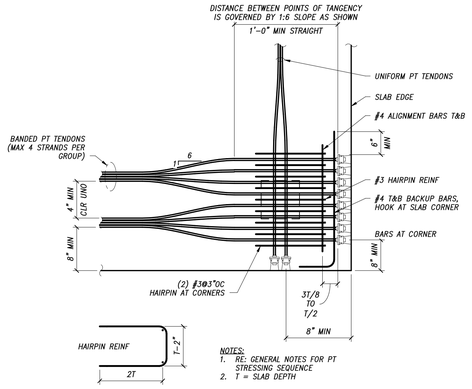


## 3 TYPICAL PT SLAB FLARING OF BANDED TENDONS AT SLAB EDGE
NTS

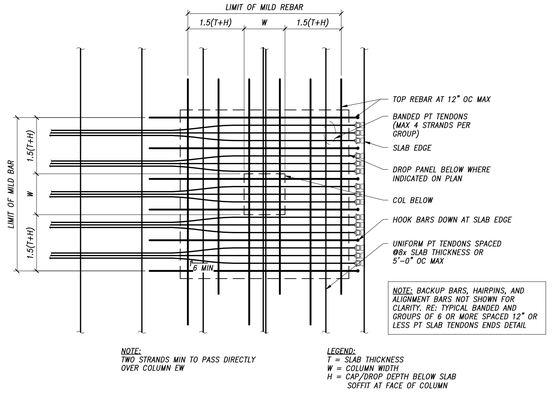


## 2 TYPICAL PT SLAB TOP REINFORCEMENT AT EXTERIOR COLUMNS
NTS

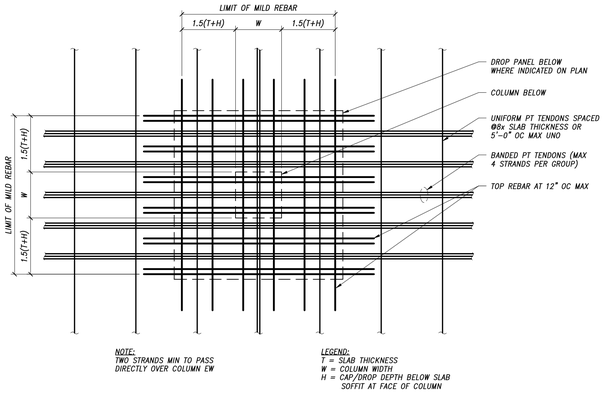


## 1 TYPICAL PT SLAB TOP REINFORCEMENT AT INTERIOR COLUMNS
NTS


OZ ARCHITECTURE
3003 Larimer Street
Denver, Colorado 80205
phone 303.861.5704
www.ozarch.com

KL&A Engineers & Builders
411 S. 4th Street
Lewiston, Idaho 83501
Phone: (208) 746-0076 Fax: (208) 687-2455
Kalispell, MT | Spokane, WA | Lewiston, ID | Lewiston, CO



© 2020 KL&A, INC



THE STRUCTURAL ENGINEERS SEAL ON THIS DRAWING INDICATES THAT THE INFORMATION SHOWN AND THE CALCULATIONS PERTAINING TO THAT INFORMATION HAVE BEEN PREPARED BY QUALIFIED PEOPLE UNDER THE DIRECTION OF THE ENGINEER-OF-RECORD. THE SEAL DOES NOT IMPLY RESPONSIBILITY FOR INFORMATION PREPARED BY OTHERS. THIS INFORMATION IS SPECIFICALLY DISCLAIMED. ON PHASED PROJECTS, DRAWINGS THAT ARE ISSUED BUT NOT SEALED SHALL BE CONSIDERED TO BE PRELIMINARY IN NATURE AND ARE ISSUED FOR INFORMATION ONLY.

THESE DRAWINGS ARE TO BE USED IN CONJUNCTION WITH THE ARCHITECTURAL DRAWINGS ON THE PROJECT TO CLEARLY DEFINE ALL OF THE REQUIREMENTS FOR THE CONSTRUCTION. WHERE CONFLICTS OCCUR CONTACT ARCHITECT FOR CLARIFICATION.


# ONE RIVER RUN
75 HUNKI DORI CT.
KEYSTONE, CO 80435

PROJ. NO. 117033.00
DRAWN: KL&A
CHECKED: JLM
APPROVED: JLM
DATE: 2020-06-25


© OZ ARCHITECTURE


ONE RIVER RUN

ISSUED FOR:
Issue for Permit/Issue for Construction

SHEET TITLE:
TYPICAL DETAILS

SCALE: As indicated
SHEET NUMBER
S-011


C:\Revit Local Files\K1498_ORR_RVT19_DJohnson-Hazlewood.rvt
6/22/2020 4:47:24 PM

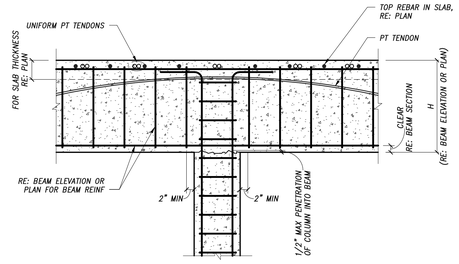


## PT BEAM CONNECTION TO INTERIOR COLUMN AT ROOF

12 NTS

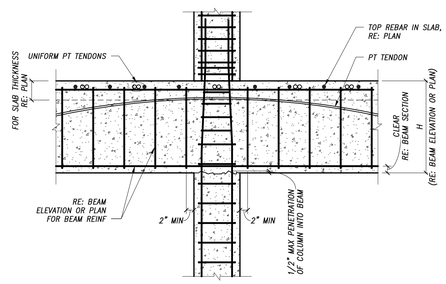


## PT BEAM CONNECTION TO INTERIOR COLUMN AT FLOOR

11 NTS

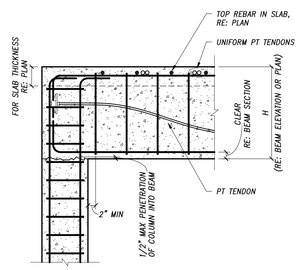


## PT BEAM CONNECTION TO EXTERIOR COLUMN AT ROOF

10 NTS

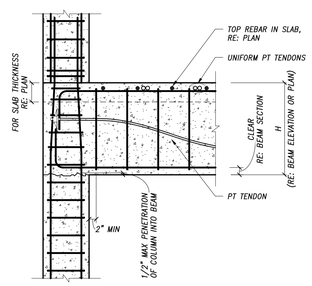


## PT BEAM CONNECTION TO EXTERIOR COLUMN AT FLOOR

9 NTS

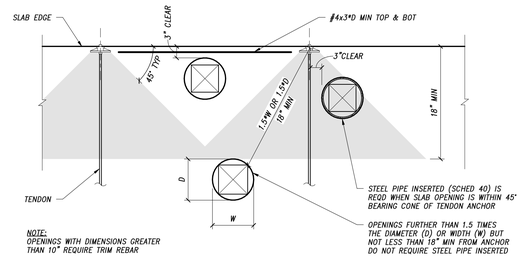


## TYPICAL OPENINGS AT PT SLAB ANCHORAGE

7 NTS

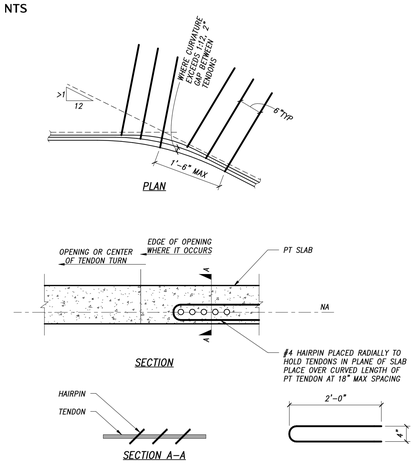


## TYPICAL HAIRPIN REINFORCING AT PT TENDON TURNS

6 NTS

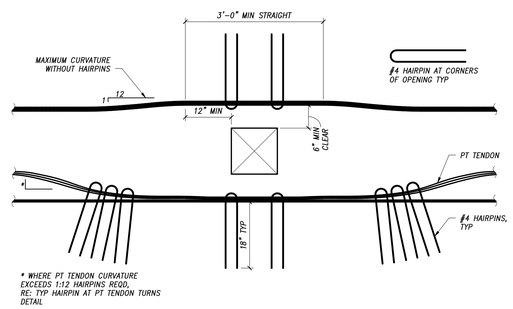


## TYPICAL PT TENDON PLACEMENT AT OPENINGS

5 NTS

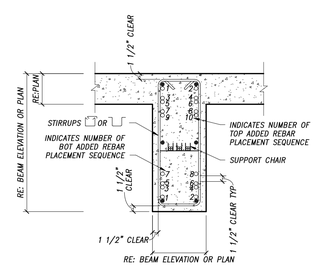


NOTES:
1. FOR ADDED REBAR, RE: BEAM ELEVATIONS OR PLAN.
2. AT CONDITIONS WHERE THERE ARE TWO TYPES OF ADDED BARS (TOP OR BOTTOM), THE LONGER BARS SHALL BE PLACED FIRST.

## PLACEMENT OF REINFORCEMENT IN BEAMS UNLESS NOTED OTHERWISE

4 NTS

TYPICAL DETAIL SHEET NOTES
1. It is the contractor's responsibility to understand the typical details on this sheet and apply them as needed on the project.
2. Typical details on this sheet are generally not referenced from any other drawing on the project.
3. Typical details on this sheet MAY be referenced on plans or details to clarify or identify a particular condition. The presence of such a reference does not alter the obligation of the contractor to apply the detail(s) as needed even if they are not referenced.

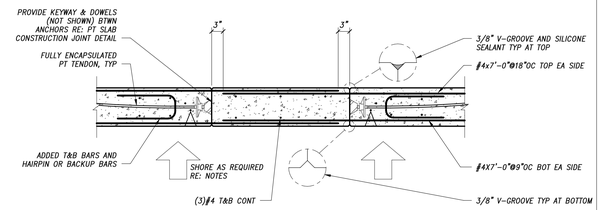


NOTES:
1. SHORING FOR PT BAY WHERE POUR STRIP IS LOCATED SHALL REMAIN IN PLACE UNTIL POUR STRIP CONCRETE HAS BEEN PLACED AND HAS REACHED 100% OF 28 DAY STRENGTH.
2. POUR STRIP CONCRETE SHALL BE PLACED A MINIMUM OF 45 DAYS AFTER STRESSING, UNO ON PLAN.
3. ROUGHEN, CLEAN, & WET JOINTS PRIOR TO PLACING CONCRETE.
4. ELIMINATE ACCIDENTAL VERTICAL MISALIGNMENT BTWN EDGE OF SLABS TO BE JOINED WITH POUR STRIP. USE MECHANICAL METHODS (I.E. JACKING) IF NECESSARY.
5. PROVIDE WATERPROOFING MEMBRANE IF REQUIRED FOR WATER-TIGHTNESS.

## TYPICAL SHORED PT SLAB POUR STRIP

3 NTS

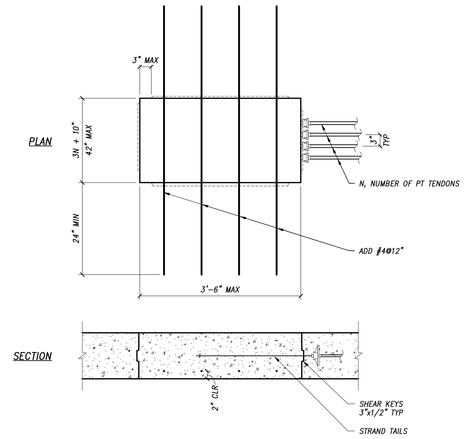


NOTES:
1. CONTINUE ALL INTERRUPTED BARS SHOWN IN PLANS THROUGH THE BLOCKOUT
2. FILL BLOCKOUT WITH NON-SHRINK CONCRETE OF MIN SAME STRENGTH AS SLAB

## TYPICAL PT SLAB STRESSING BLOCKOUT

2 NTS

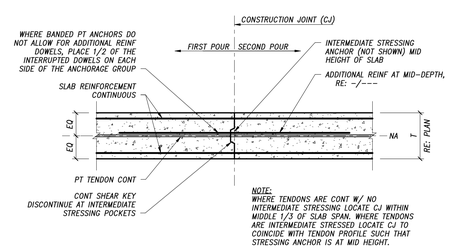


NOTE:
WHERE TENDONS ARE CONT W/ NO INTERMEDIATE STRESSING LOCATE CJ WITHIN MIDDLE 1/3 OF SLAB SPAN. WHERE TENDONS ARE INTERMEDIATE STRESSED LOCATE CJ TO COINCIDE WITH TENDON PROFILE SUCH THAT STRESSING ANCHOR IS AT MID HEIGHT.

## TYPICAL PT SLAB CONSTRUCTION JOINT

1 NTS

THE STRUCTURAL ENGINEER'S SEAL ON THIS DRAWING INDICATES THAT THE INFORMATION SHOWN AND THE CALCULATIONS PERTAINING TO THAT INFORMATION HAVE BEEN PREPARED BY QUALIFIED PEOPLE UNDER THE DIRECTION OF THE ENGINEER-OF-RECORD. THE SEAL DOES NOT IMPLY RESPONSIBILITY FOR INFORMATION PREPARED BY OTHERS NOT FOR THAT INFORMATION NOT SHOWN ON THIS DRAWING AND SUCH RESPONSIBILITY IS SPECIFICALLY DISCLAIMED. ON PHASED PROJECTS, DRAWINGS THAT ARE ISSUED BUT NOT SEALED SHALL BE CONSIDERED TO BE PRELIMINARY IN NATURE AND ARE ISSUED FOR INFORMATION ONLY.

THESE DRAWINGS ARE TO BE USED IN CONJUNCTION WITH THE ARCHITECTURAL DRAWINGS ON THE PROJECT TO CLEARLY DEFINE ALL OF THE REQUIREMENTS FOR THE CONSTRUCTION. WHERE CONFLICTS OCCUR CONTACT ARCHITECT FOR CLARIFICATION.


OZ ARCHITECTURE
3003 Larimer Street
Denver, Colorado 80205
phone 303.861.5704
www.ozarch.com

KL&A Engineers & Builders
475 S. 4th Street
Louisville, Colorado 80027
Phone: (303) 673-9700 Fax: (303) 667 2493
Carbondale, CO | Glenwood Springs, CO | Louisville, CO


© 2020 KL&A, INC

# ONE RIVER RUN
75 HUNKI DORI CT.
KEYSTONE, CO 80435

PROJ. NO. 117033.00
DRAWN: KL&A
CHECKED: JLM
APPROVED: JLM
DATE: 2020-06-25

© OZ ARCHITECTURE

ONE RIVER RUN

ISSUED FOR:
Issue for Permit/Issue for Construction

SHEET TITLE:
TYPICAL DETAILS

SCALE: 3/4" = 1'-0"
SHEET NUMBER
S-012

C:\Revit Local Files\K1468_ORR_RVT19_DJohnson-Hazlewood.rvt
6/22/2020 4:47:27 PM

TYPICAL DETAIL SHEET NOTES
1. It is the contractor's responsibility to understand the typical details on this sheet and apply them as needed on the project.
2. Typical details on this sheet are generally not referenced from any other drawing on the project.
3. Typical details on this sheet MAY be referenced on plans or details to clarify or identify a particular condition. The presence of such a reference does not alter the obligation of the contractor to apply the detail(s) as needed even if they are not referenced.

## TYPICAL DOUBLE ANGLE BEAM SHEAR SPLICE – LRFD

3/4"ϕ A325N BOLTS  E70XX ELECTRODES  Fy=36 KSI ANGLES
Fy=50 KSI BEAMS AND GIRDERS  ANGLE LEG THICKNESS=3/8"

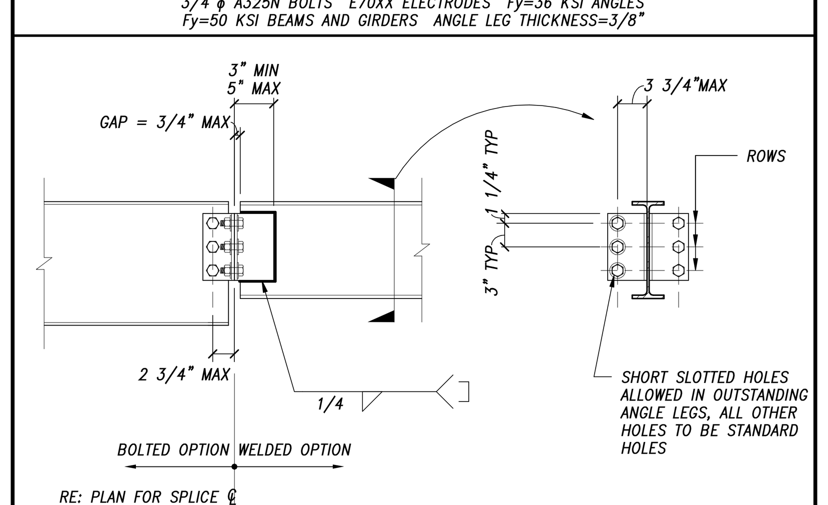


| SHALLOWER MEMBER DEPTH | ROWS OF BOLTS | BOLTED OPTION CAPACITY (k) | WELDED OPTION CAPACITY (k) |
|---|---|---|---|
| W8 | 2 | 16 (23) | 42 (43) |
| W10 | 2 | 18 (23) | 43 |
| W12 | 3 | 36 (42) | 104 |
| W14 | 3 | 42 | 104 |
| W16 | 4 | 70 | 143 |
| W18 | 5 | 112 | 178 |
| W21 | 6 | 158 | 214 |
| W24 | 7 | 176 | 250 |
| W27 | 7 | 228 | 250 |
| W30 | 8 | 265 | 286 |
| W33 | 9 | 302 | 322 |
| W36 | 10 | 338 | 357 |

NOTES:
1. CONNECTION CAPACITY MUST MEET OR EXCEED REACTION SHOWN ON PLAN. OTHERWISE, RE: DETAILS OR CONTACT STRUCTURAL ENGINEER FOR ALTERNATE CONNECTION.
2. ANGLE LEGS MAY BE BOLTED OR WELDED AT CONTRACTOR'S OPTION.
3. VALUES IN () APPLY TO BEAM SIZES W8x15, W10x17, W12x19, AND HEAVIER.
4. CAPACITIES ARE BASED ON AISC 360–10, LOAD AND RESISTANCE FACTORED DESIGN.

# 5 TYPICAL DOUBLE ANGLE BEAM SHEAR SPLICE
NTS

## TYPICAL DOUBLE ANGLE SHEAR CONNECTIONS – LRFD (AISC 360–10)

3/4"ϕ A325N BOLTS  E70XX ELECTRODES  Fy=36 KSI ANGLES  Fy=50 KSI BEAMS AND GIRDERS
ANGLE LEG THICKNESS=3/8"

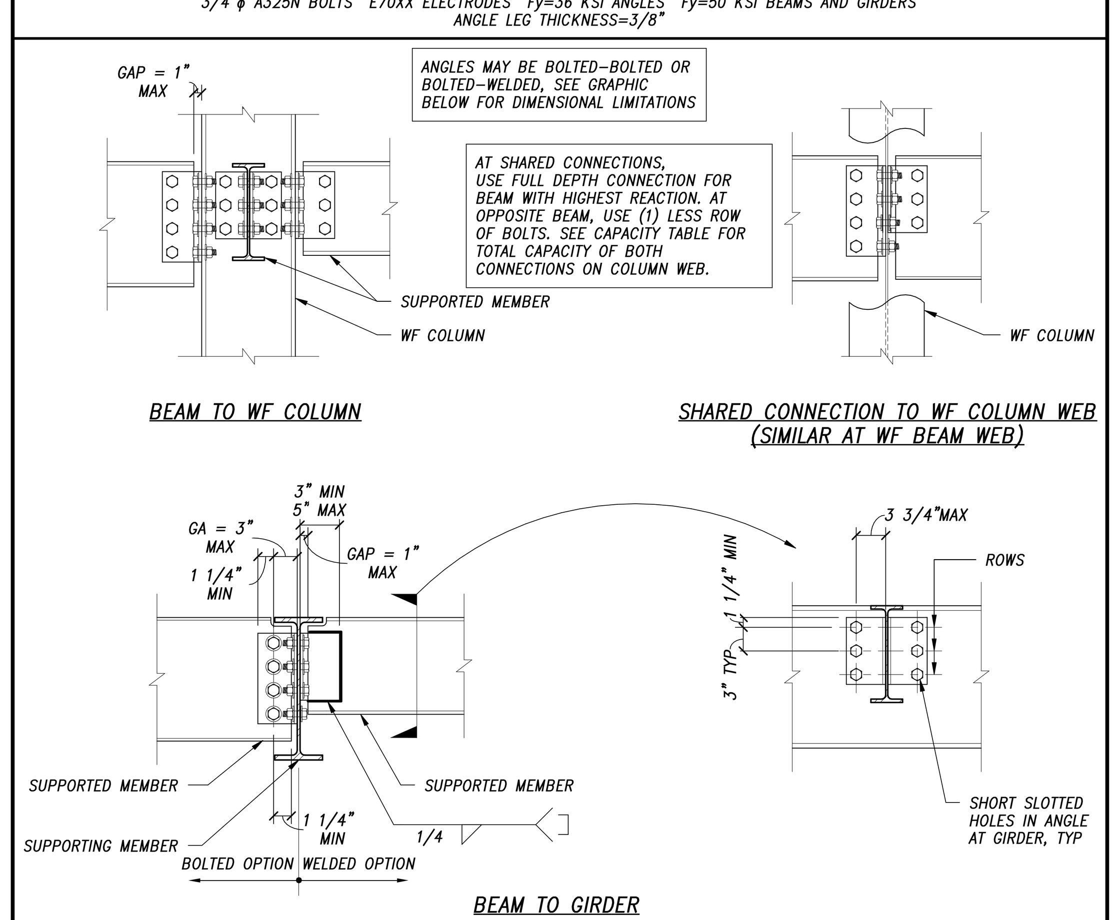


| MEMBER DEPTH | ROWS OF BOLTS | MAX COPE DEPTH (in) | MAX COPE LENGTH (in) | SINGLE CONNECTION CAPACITY (k) | | | SHARED CONNECTION CAPACITY (k) | |
|---|---|---|---|---|---|---|---|---|
| | | | | NO COPE | SINGLE COPE | DOUBLE COPE | 5/16" WEB | 3/8" WEB |
| W8 | 2 | 1 | 4 | 29 (42) | 18 (27) | 8 (13) | NOTE 4 | NOTE 4 |
| W10 | 2 | 1 1/2 | 4 | 33 (42) | 21 (27) | 13 (18) | NOTE 4 | NOTE 4 |
| W12 | 3 | 1 1/2 | 4 | 52 (61) | 35 (41) | 23 (29) | NOTE 4 | NOTE 4 |
| W14 | 3 | 1 1/2 | 4 | 60 | 40 | 39 | NOTE 4 | NOTE 4 |
| W16 | 4 | 1 1/2 | 5 | 87 | 59 | 50 | NOTE 4 | NOTE 4 |
| W18 | 5 | 1 1/2 | 5 | 116 | 90 | 81 | NOTE 4 | NOTE 4 |
| W21 | 6 | 1 1/2 | 5 1/2 | 158 | 126 | 126 | NOTE 4 | NOTE 4 |
| W24 | 6 [7] | 2 | 6 | 207 [201] | 142 [167] | 142 [155] | 362 | NOTE 4 |
| W27 | 7 | 2 | 6 | 250 | 195 | 195 | 362 | 430 |
| W30 | 8 | 2 | 7 | 286 | 228 | 228 | 414 | 491 |
| W33 | 9 | 2 1/2 | 7 | 322 | 301 | 301 | 466 | 552 |
| W36 | 10 | 2 1/2 | 7 | 357 | 357 | 357 | 517 | 614 |

NOTES:
1. CONNECTION CAPACITY MUST MEET OR EXCEED REACTION SHOWN ON PLAN. CONTACT STRUCTURAL ENGINEER FOR ALTERNATE CONNECTION WHEN TABLE VALUES ARE EXCEEDED.
2. ANGLE LEGS MAY BE BOLTED OR WELDED AT CONTRACTOR'S OPTION. THICKNESS = 3/8" MINIMUM
3. FABRICATOR MAY CHOOSE ANGLE SIZE BASED ON BOLT GAGE AND MINIMUM EDGE DISTANCES PROVIDED.
4. TABULATED VALUES BASED ON GIRDER THAT IS LIGHTEST SECTION ONE SIZE LARGER IN DEPTH THAN THE SUPPORTED MEMBER.
5. VALUES IN (#) APPLY TO BEAM SIZES W8x15, W10x17, W12x19, AND HEAVIER.
6. VALUES IN [#] APPLY TO W24 W/ (7) BOLTS, USE (7) BOLTS WHERE LOAD INDICATED ON PLAN EXCEEDS CAPACITY OF (6) BOLT CONNECTION. (7) BOLT CONNECTION REQUIRES ENCROACHMENT OF BEAM FILLET (K).
7. CAPACITIES ARE BASED ON AISC 360–10, LOAD AND RESISTANCE FACTORED DESIGN (LRFD).
8. HOLES IN ANGLE AT SUPPORTED BEAM MAY BE EITHER STANDARD OR SHORT–SLOT HOLES.

ADDITIONAL NOTES FOR SHARED CONNECTIONS:
1. SHARED CONNECTION DEMAND IS THE SUM OF EACH BEAM REACTION SHOWN ON PLAN. SHARED CONNECTION CAPACITY MUST EXCEED SHARED CONNECTION DEMAND. CONTACT STRUCTURAL ENGINEER FOR ALTERNATE CONNECTION WHEN TABLE VALUES ARE EXCEEDED.
2. SHARED CONNECTIONS NOT PERMITTED FOR COLUMN/GIRDER WEB THICKNESS 1/4" AND LESS.
3. SHARED CONNECTIONS ARE NOT LIMITED IN CAPACITY FOR COLUMN/GIRDER WEB THICKNESS 7/16" AND GREATER.
4. SHARED CONNECTIONS FOR W24 BEAMS AND SHALLOWER ARE PERMITTED AND ARE NOT LIMITED IN CAPACITY FOR 5/16" AND 3/8" WEBS. SHARED CONNECTION CAPACITIES ARE ALWAYS AT LEAST TWICE THE VALUE SHOWN IN THE SINGLE CONNECTION COLUMN.
5. SHARED CONNECTIONS NOT PERMITTED FOR (2) BOLT ROW CONNECTIONS. (3) BOLTS ON ONE SIDE OF CONNECTION AND (2) BOLTS ON THE OTHER SIDE ARE PERMITTED
6. AT SHARED CONNECTIONS WITH EQUAL MEMBER DEPTHS, USE THE CAPACITY VALUES FOR THE INDICATED MEMBER DEPTH FOR ONE BEAM AND THE CAPACITY WITH ONE ROW LESS OF BOLTS FOR THE OPPOSITE SIDE MEMBER. (IE AT W21 BEAMS, USE CAPACITIES FOR A (6) BOLT AND (5) BOLT CONNECTION FOR EACH RESPECTIVE BEAM).

# 3 TYPICAL DOUBLE ANGLE SHEAR CONNECTION
NTS

## TYPICAL SINGLE ANGLE SHEAR CONNECTIONS – LRFD (AISC 360–10)

3/4"ϕ A325N BOLTS  E70XX ELECTRODES  Fy=36 KSI ANGLES  Fy=50 KSI BEAMS AND GIRDERS
ANGLE LEG THICKNESS=3/8" MIN

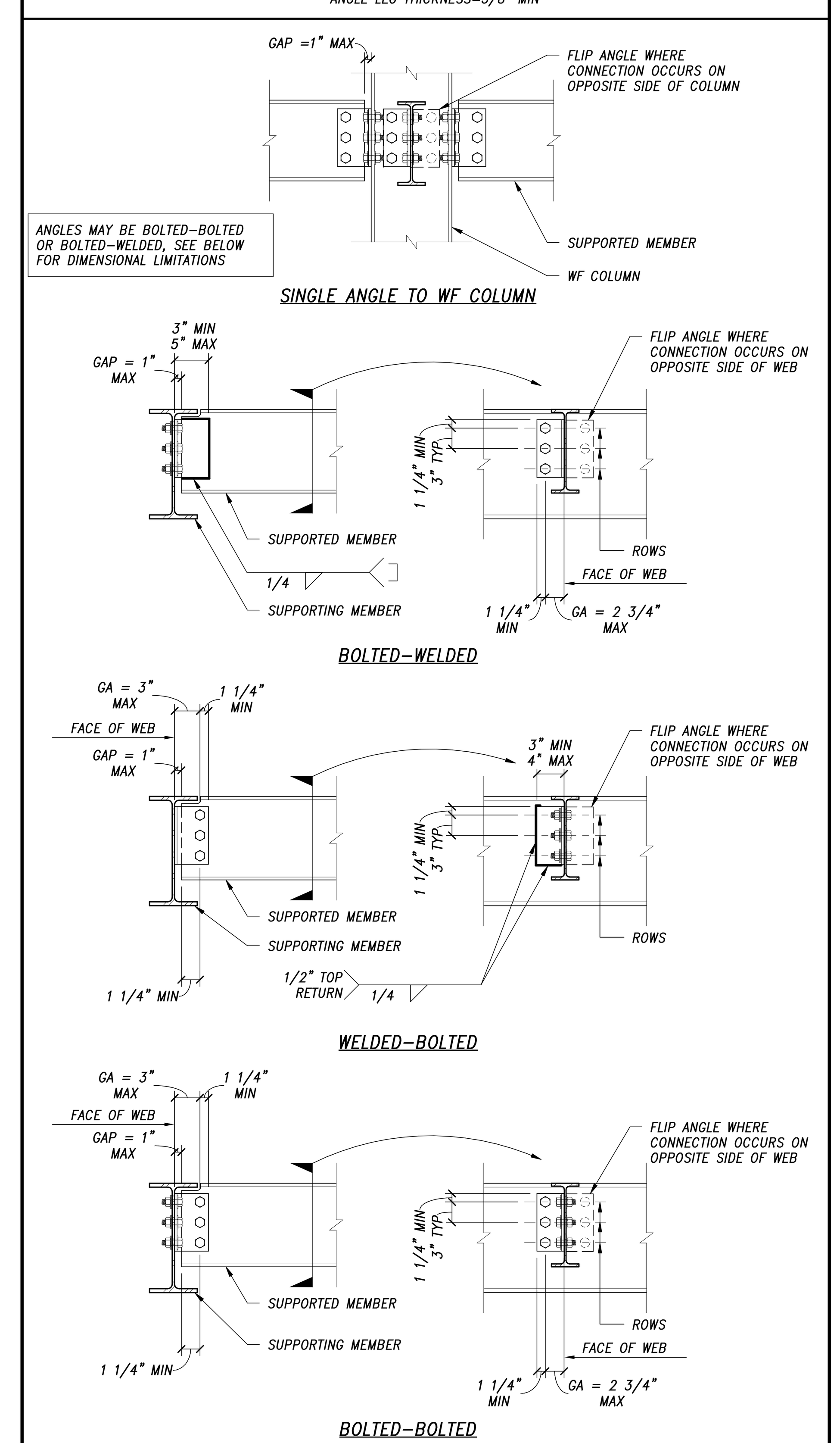


| MEMBER DEPTH | ROWS OF BOLTS | MAX COPE DEPTH (in) | MAX COPE LENGTH (in) | CAPACITY (k) | | |
|---|---|---|---|---|---|---|
| | | | | NO COPE | SINGLE COPE | DOUBLE COPE |
| W8 | 2 | 1 | 4 | 15 (16) | 15 (16) | 9 (13) |
| W10 | 2 | 1 1/2 | 4 | 16 | 16 | 13 (16) |
| W12 | 3 | 1 1/2 | 4 | 32 | 32 | 23 (29) |
| W14 | 3 | 1 1/2 | 4 | 32 | 32 | 32 |
| W16 | 4 | 1 1/2 | 5 | 51 | 51 | 50 |
| W18 | 5 | 1 1/2 | 5 | 70 | 70 | 70 |
| W21 | 6 | 1 1/2 | 5 1/2 | 89 | 89 | 89 |
| W24 | 6 [7] | 2 | 6 | 89 [108] | 89 [108] | 89 [108] |
| W27 | 7 | 2 | 6 | 108 | 108 | 108 |
| W30 | 8 | 2 | 7 | 127 | 127 | 127 |
| W33 | 9 | 2 1/2 | 7 | 145 | 145 | 145 |
| W36 | 10 | 2 1/2 | 7 | 164 | 164 | 164 |

NOTES:
1. CONNECTION CAPACITY MUST MEET OR EXCEED REACTION SHOWN ON PLAN. CONTACT STRUCTURAL ENGINEER FOR ALTERNATE CONNECTION WHEN TABLE VALUES ARE EXCEEDED.
2. ANGLE LEGS MAY BE BOLTED OR WELDED AT CONTRACTOR'S OPTION.
3. FABRICATOR MAY CHOOSE ANGLE SIZE BASED ON BOLT GAGE AND MINIMUM EDGE DISTANCES PROVIDED. ANGLE THICKNESS = 3/8" MINIMUM
4. VALUES IN (#) APPLY TO BEAM SIZES W8x15, W10x17, W12x19, AND HEAVIER.
5. VALUES IN [#] APPLY TO W24 W/ (7) BOLTS, USE (7) BOLTS WHERE LOAD INDICATED ON PLAN EXCEEDS CAPACITY OF (6) BOLT CONNECTION. (7) BOLT CONNECTION REQUIRES ENCROACHMENT OF BEAM FILLET (K).
6. CAPACITIES ARE BASED ON AISC 360–10, LOAD AND RESISTANCE FACTORED DESIGN (LRFD).
7. HOLES IN SUPPORTING MEMBER ARE STANDARD HOLES. HOLES IN SUPPORTED BEAM WEB MAY BE STANDARD OR SHORT–SLOTTED.
8. SINGLE ANGLE NOT TO BE USED IN THE CONDITION OF SUPPORTING A CANTILEVERED BEAM WHERE NO FLANGE COVER PLATES OR FLANGE CONTINUITY WELDS ARE USED.

# 1 TYPICAL SINGLE ANGLE SHEAR CONNECTIONS
NTS

## TYPICAL EMBED PLATE CONNECTION – LRFD

| BEAM SIZE | SINGLE ANGLE CAPACITY | DOUBLE ANGLE CAPACITY | ANGLE LENGTH "L" | DEPTH TO ANGLE "D" |
|---|---|---|---|---|
| W8,10[3] | 21k | 37k | 0'–5 1/2" | (W8) 1 1/4" (W10) 2 1/4" |
| W12,14[3] | 58k | 70k | 0'–8 1/2" | 2 1/4" |
| W16 | 88k | 100k | 0'–11" | 2 1/2" |
| W18 | 105k | 137k | 1'–1" | 2 1/2" |
| W21 | 129k | 191k | 1'–4" | 2 1/2" |
| W24 | 145k | 234k | 1'–6" | 3" |
| W27 | 170k | N/A | 1'–9" | 3" |
| W30 | 192k | N/A | 2'–0" | 3" |
| W33 | 213k | N/A | 2'–3" | 3" |
| W36 | 237k | N/A | 2'–6" | 3" |

NOTES:
1. CONNECTION CAPACITY MUST MEET OR EXCEED REACTION SHOWN ON PLAN, OTHERWISE RE: DETAILS OR CONTACT STRUCTURAL ENGINEER FOR ALTERNATE CONNECTION.
2. MINIMUM BEAM SIZES FOR SHALLOW BEAMS ARE W8x15, W10x17, AND W12x19.
3. CAPACITIES ARE BASED ON 13TH ED, LOAD AND RESISTANCE FACTORED DESIGN.
4. FOR SKEWED BEAM CONNECTIONS BETWEEN 45° AND 90°, SINGLE BENT PLATE MAY BE USED IN LIEU OF SINGLE ANGLE. BENT PLATE SHALL BE 3/8" THICK AND MATCH SINGLE ANGLE LEG SIZES.
5. RE: DETAILS OR CONTACT STRUCTURAL ENGINEER FOR ALTERNATE CONNECTION AT BEAM SIZES GREATER THAN W24 WITH REACTIONS GREATER THAN SINGLE ANGLE CAPACITIES.

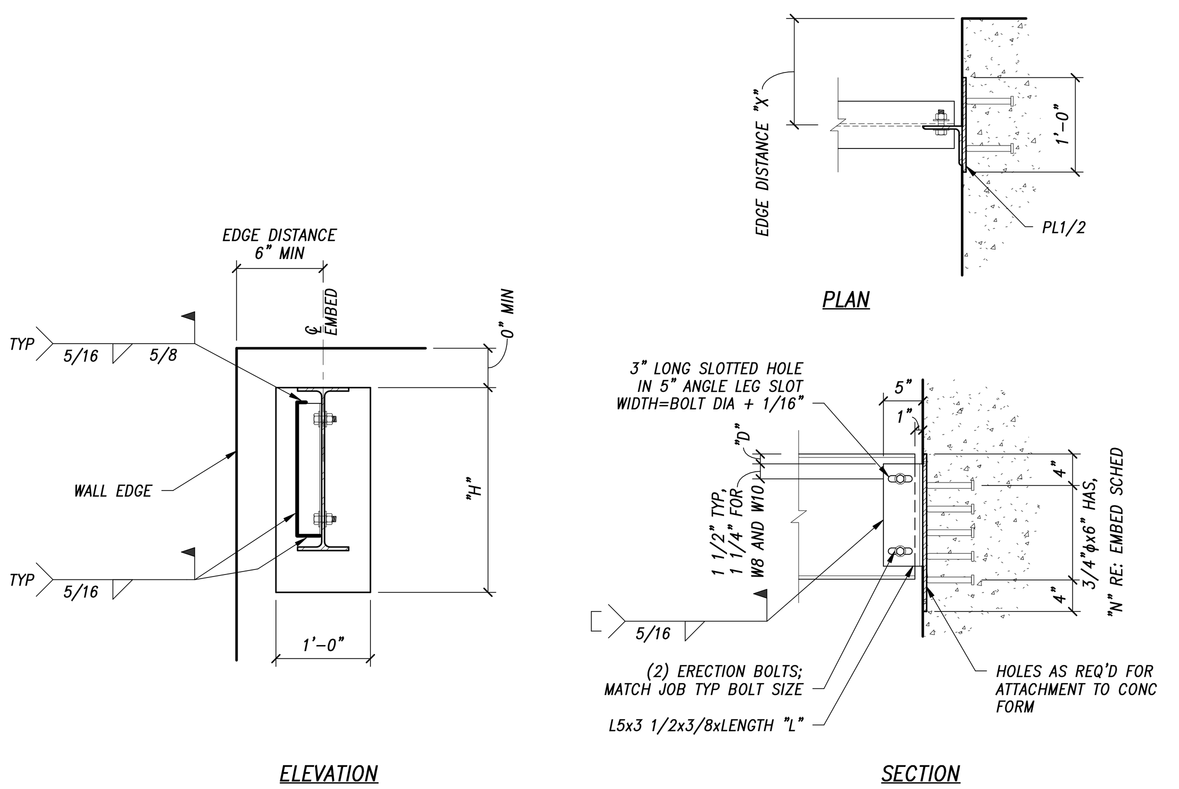


SINGLE ANGLE DETAIL

NOTE:
USE TYP EMBED AS NOTED ON PLAN, WHERE EMBED CALL OUT IS NOT INDICATED, SIZE RE: ANGLE SCHEDULE

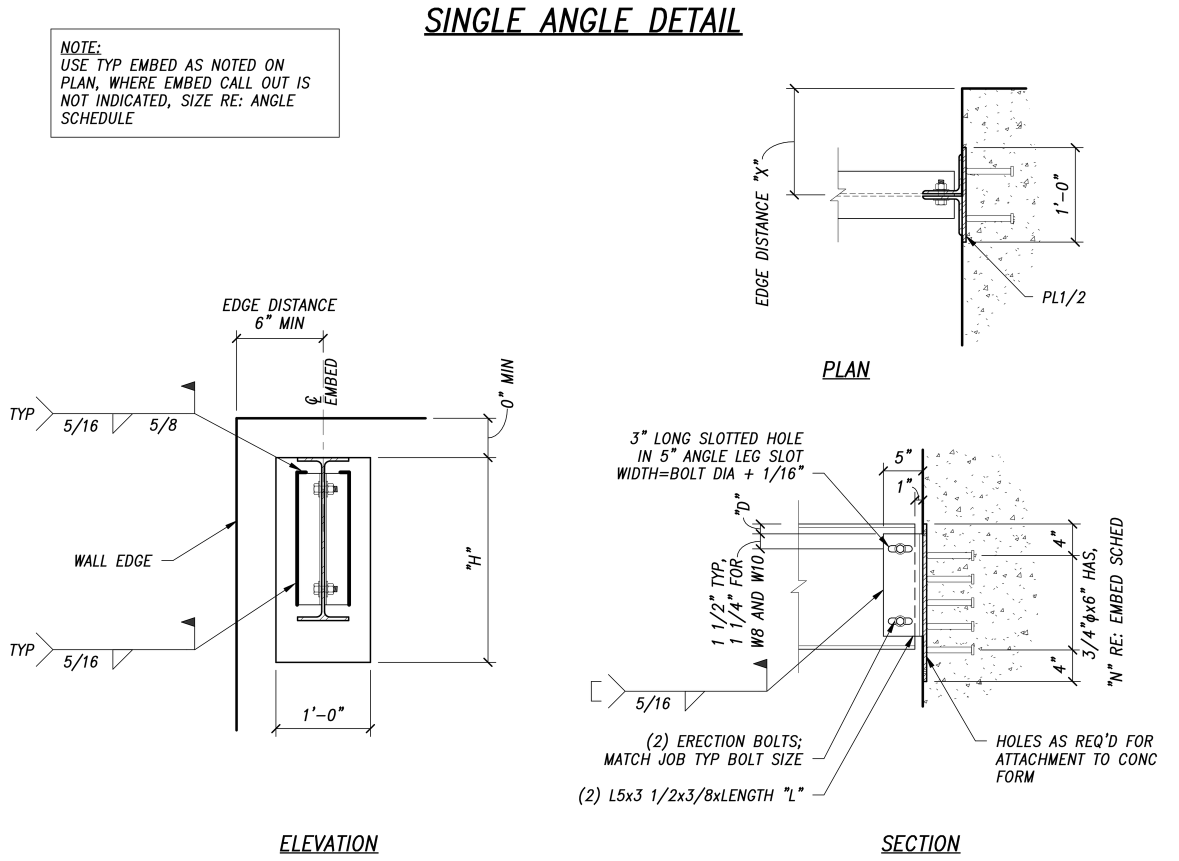


DOUBLE ANGLE DETAIL

# 4 TYPICAL EMBED CONNECTION DETAIL
NTS

## TYPICAL SHEAR TAB (SINGLE PLATE) CONNECTIONS – LRFD (AISC 360–10)
### BEAM TO COLUMN OR WIDE FLANGE GIRDER OR COLUMN

3/4"ϕ A325N BOLTS  E70XX ELECTRODES  Fy=36 KSI TABS  Fy=50 KSI BEAMS, GIRDERS, AND COLUMNS  Fy=35 KSI PIPE

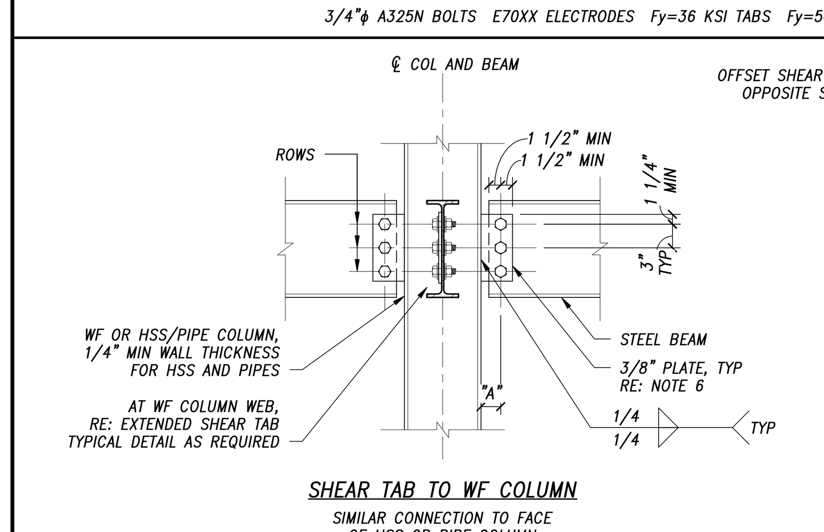


SHEAR TAB TO WF COLUMN
SIMILAR CONNECTION TO FACE OF HSS OR PIPE COLUMN

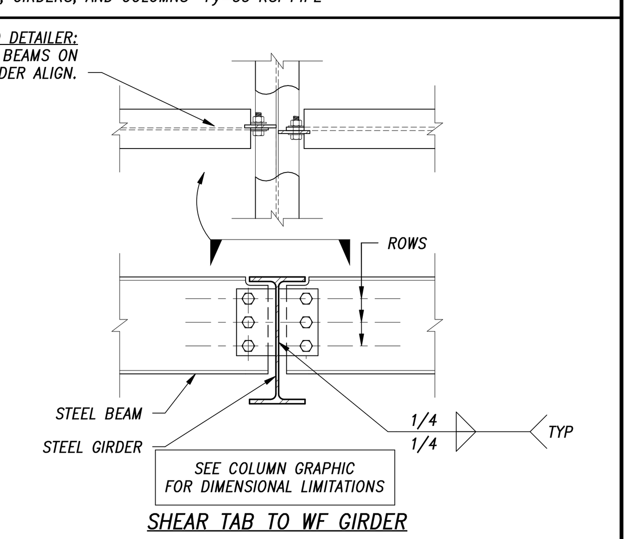


SHEAR TAB TO WF GIRDER

| MEMBER DEPTH | ROWS OF BOLTS | MAX COPE DEPTH (in) | MAX COPE LENGTH (in) | CAPACITY (K) | | | |
|---|---|---|---|---|---|---|---|
| | | | | "A"<=3" | "A"<=3 1/2" | | "A"=5" |
| | | | | NO COPE | SINGLE COPE | DOUBLE COPE | DOUBLE COPE |
| W8 | 2 | 1 | 4 | 20 (24) | 18 (22) | 8 (13) | 8 (10) |
| W10 | 2 | 1.5 | 4 | 23 (24) | 21 (22) | 13 (18) | 9 (10) |
| W12 | 3 | 1.5 | 4 | 43 (44) | 40 (42) | 23 (29) | 20 |
| W14 | 3 | 1.5 | 4 | 44 | 42 | 39 | 20 |
| W16 | 4 | 1.5 | 5 | 63 | 61 | 50 | 35 |
| W18 | 5 | 1.5 | 5 | 82 | 80 | 80 | 52 |
| W21 | 6 * | 1.5 | 5.5 | 89 | 84 | 84 | 71 |
| W24 | 6 [7]* | 2 | 6 | 89 [108] | 84 [104] | 84 [104] | 71 [90] |
| W27 | 7 * | 2 | 6 | 108 | 104 | 104 | 90 |
| W30 | 8 * | 2 | 7 | 127 | 123 | 123 | 109 |
| W33 | 9 * | 2.5 | 7 | 142 | 142 | 142 | 129 |
| W36 | 10 * | 2.5 | 7 | 157 | 157 | 157 | 148 |

NOTES:
1. CONNECTION CAPACITY MUST MEET OR EXCEED REACTION SHOWN ON PLAN. CONTACT STRUCTURAL ENGINEER FOR ALTERNATE CONNECTION WHEN TABLE VALUES ARE EXCEEDED.
2. VALUES IN (#) APPLY TO BEAM SIZES W8x15, W10x17, W12x19, AND HEAVIER.
3. VALUES IN [#] APPLY TO W24 W/ (7) BOLTS, USE (7) BOLTS WHERE LOAD INDICATED ON PLAN EXCEEDS CAPACITY OF (6) BOLT CONNECTION. (7) BOLT CONNECTION REQUIRES ENCROACHMENT OF BEAM FILLET (K).
4. CAPACITIES ARE BASED ON AISC 360–10, LOAD AND RESISTANCE FACTORED DESIGN (LRFD).
5. HOLES IN SHEAR TAB FOR 5 ROWS OF BOLTS AND LESS MAY BE EITHER STANDARD OR SHORT–SLOT HOLES.
6. * INDICATES AT 6 ROWS OF BOLTS AND GREATER, HOLES IN SHEAR TAB ARE REQUIRED TO BE SHORT–SLOT HOLES OR SHEAR TAB THICKNESS SHALL BE REDUCED TO 5/16 THICKNESS WITH STANDARD HOLES

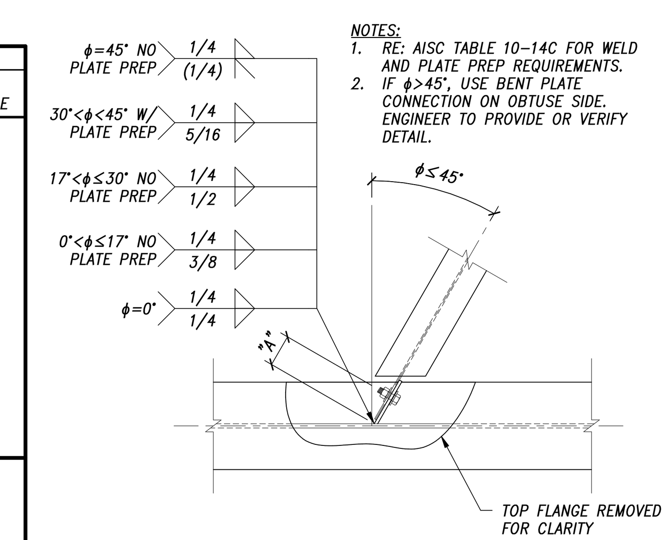


NOTES:
1. RE: AISC TABLE 10–14C FOR WELD AND PLATE PREP REQUIREMENTS.
2. IF ϕ>45°, USE BENT PLATE CONNECTION ON OBTUSE SIDE. ENGINEER TO PROVIDE OR VERIFY DETAIL.

SKEWED SHEAR TAB DETAIL

# 2 TYPICAL SHEAR TAB CONNECTIONS
NTS

THE STRUCTURAL ENGINEERS SEAL ON THIS DRAWING INDICATES THAT THE INFORMATION SHOWN AND THE CALCULATIONS PERTAINING TO THAT INFORMATION HAVE BEEN PREPARED BY QUALIFIED PEOPLE UNDER THE DIRECTION OF THE ENGINEER–OF–RECORD. THE SEAL DOES NOT IMPLY RESPONSIBILITY FOR INFORMATION PREPARED BY OTHERS NOR FOR ANY INFORMATION NOT SHOWN ON THIS DRAWING AND SUCH RESPONSIBILITY IS SPECIFICALLY DISCLAIMED. ON PHASED PROJECTS, DRAWINGS THAT ARE ISSUED BUT NOT SEALED SHALL BE CONSIDERED TO BE PRELIMINARY IN NATURE AND ARE ISSUED FOR INFORMATION ONLY.

THESE DRAWINGS ARE TO BE USED IN CONJUNCTION WITH THE ARCHITECTURAL DRAWINGS ON THE PROJECT TO CLEARLY DEFINE ALL OF THE REQUIREMENTS FOR THE CONSTRUCTION. WHERE CONFLICTS OCCUR CONTACT ARCHITECT FOR CLARIFICATION.


OZ ARCHITECTURE®
3003 Larimer Street
Denver, Colorado 80205
phone 303.861.5704
www.ozarch.com

KL&A
Engineers & Builders
421 E. 4th Street
Loveland, Colorado 80537
P: (970) 667 2426 F: (970) 667 2493
Buffalo, WY ○ Carbondale, CO ○ Golden, CO ○ Loveland, CO

© 2020 KL&A, INC

# ONE RIVER RUN
75 HUNKI DORI CT.
KEYSTONE, CO 80435

PROJ. NO. 117033.00
DRAWN: KL&A
CHECKED: JLM
APPROVED: JLM
DATE: 2020-06-25

© OZ ARCHITECTURE

ONE RIVER RUN

ISSUED FOR:
Issue for Permit/Issue for Construction

SHEET TITLE:
TYPICAL DETAILS

SCALE: NTS
SHEET NUMBER
S-013

C:\Revit Local Files\K1498_ORR_RVT19_DJohnson-Hazlewood.rvt
6/22/2020 4:47:32 PM

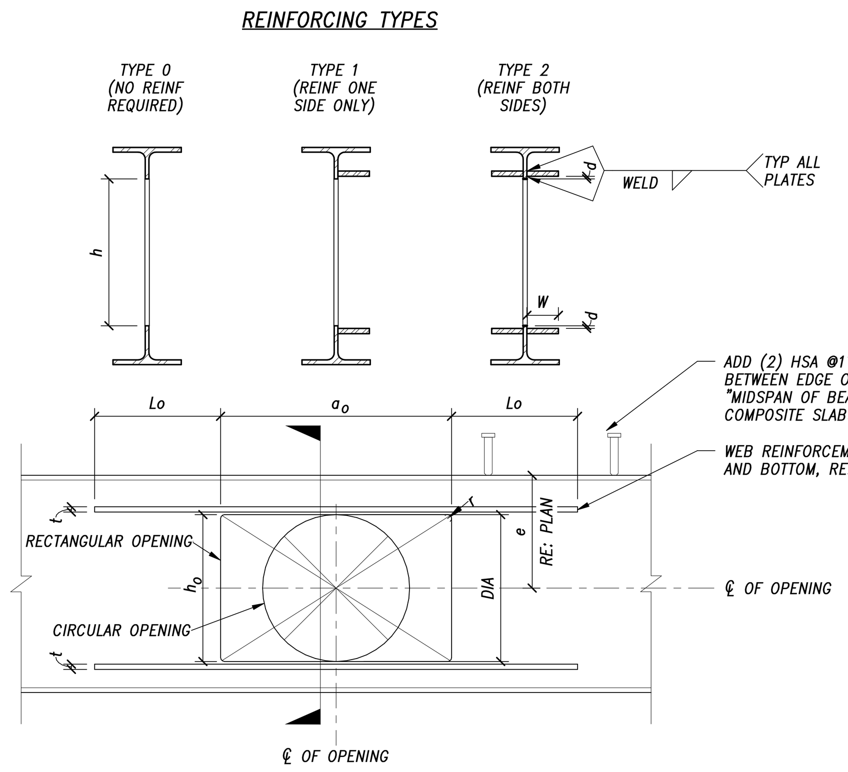


BEAM PENETRATION GENERAL NOTES:

1. BEAM PENETRATIONS ARE SHOWN ON PLAN. ADDITIONAL PENETRATIONS MUST BE AUTHORIZED BY THE STRUCTURAL ENGINEER.

## 9 TYPICAL OPENING IN BEAM WEB FOR MECHANICAL ELECTRICAL AND PLUMBING
NTS

| DECK INFORMATION | | | | | NO OPENINGS – SUPERIMPOSED LOAD CAPACITY | | | OPENINGS – SUPERIMPOSED LOAD CAPACITY | | | |
|---|---|---|---|---|---|---|---|---|---|---|---|
| DECK | GAGE | CONC | TOTAL DEPTH | MAX SPAN | NO SHEAR STUDS (SHEAR BOND) | STUDS @ 24"OC (SHEAR BOND) | DECK BENDING W/ NO STUDS (MOMENT) | OPENING AT MIDSPAN (BENDING CONTROL) | OPENING AT SUPPORT W/ NO STUDS (SHEAR BOUND) | OPENING AT SUPPORT W/ STUDS @24"OC (SHEAR BOUND) | DECK WEAK AXIS SPAN |
| 1.5" | 20 GA | 2.5" | 4" | 8'-6" | 182 PSF | 271 PSF | 328 PSF | 230 PSF | 146 PSF | 217 PSF | 164 PSF |
| | | 3.5" | 5" | 8'-0" | 257 PSF | 334 PSF | 504 PSF | 353 PSF | 206 PSF | 267 PSF | 379 PSF |
| | | 4.5" | 6" | 7'-6" | 348 PSF | 376 PSF | 735 PSF | 515 PSF | 278 PSF | 301 PSF | 560 PSF |
| | 18 GA | 2.5" | 4" | 10'-6" | 156 PSF | 182 PSF | 278 PSF | 195 PSF | 125 PSF | 146 PSF | 164 PSF |
| | | 3.5" | 5" | 9'-6" | 233 PSF | 301 PSF | 466 PSF | 326 PSF | 186 PSF | 241 PSF | 379 PSF |
| | | 4.5" | 6" | 8'-6" | 337 PSF | 363 PSF | 750 PSF | 525 PSF | 270 PSF | 290 PSF | 560 PSF |
| 2" | 20 GA | 2.5" | 4.5" | 10'-0" | 112 PSF | 232 PSF | 207 PSF | 145 PSF | 90 PSF | 186 PSF | 134 PSF |
| | | 3" | 5" | 10'-0" | 128 PSF | 269 PSF | 239 PSF | 167 PSF | 102 PSF | 215 PSF | 213 PSF |
| | | 3.5" | 5.5" | 9'-6" | 158 PSF | 335 PSF | 307 PSF | 215 PSF | 126 PSF | 268 PSF | 295 PSF |
| | | 4" | 6" | 9'-0" | 194 PSF | 344 PSF | 391 PSF | 274 PSF | 155 PSF | 275 PSF | 358 PSF |
| | | 4.5" | 6.5" | 8'-6" | 237 PSF | 356 PSF | 495 PSF | 347 PSF | 190 PSF | 285 PSF | 428 PSF |
| | 18 GA | 2.5" | 4.5" | 12'-0" | 102 PSF | 177 PSF | 187 PSF | 131 PSF | 82 PSF | 142 PSF | 134 PSF |
| | | 3" | 5" | 11'-6" | 126 PSF | 226 PSF | 238 PSF | 167 PSF | 101 PSF | 181 PSF | 213 PSF |
| | | 3.5" | 5.5" | 11'-6" | 141 PSF | 258 PSF | 271 PSF | 190 PSF | 113 PSF | 206 PSF | 295 PSF |
| | | 4" | 6" | 11'-0" | 170 PSF | 297 PSF | 338 PSF | 237 PSF | 136 PSF | 238 PSF | 358 PSF |
| | | 4.5" | 6.5" | 10'-6" | 203 PSF | 312 PSF | 418 PSF | 293 PSF | 162 PSF | 250 PSF | 428 PSF |
| 3" | 20 GA | 2.5" | 5.5" | 12'-0" | 89 PSF | 182 PSF | 152 PSF | 106 PSF | 71 PSF | 146 PSF | 98 PSF |
| | | 3" | 6" | 11'-6" | 109 PSF | 229 PSF | 190 PSF | 133 PSF | 87 PSF | 183 PSF | 161 PSF |
| | | 3.5" | 6.5" | 11'-6" | 121 PSF | 257 PSF | 212 PSF | 148 PSF | 97 PSF | 206 PSF | 236 PSF |
| | | 4" | 7" | 11'-0" | 145 PSF | 314 PSF | 263 PSF | 184 PSF | 116 PSF | 251 PSF | 286 PSF |
| | | 4.5" | 7.5" | 10"-0" | 190 PSF | 329 PSF | 363 PSF | 254 PSF | 152 PSF | 263 PSF | 340 PSF |
| | 18 GA | 2.5" | 5.5" | 14'-6" | 84 PSF | 151 PSF | 135 PSF | 95 PSF | 74 PSF | 121 PSF | 98 PSF |
| | | 3" | 6" | 14'-0" | 103 PSF | 173 PSF | 166 PSF | 116 PSF | 82 PSF | 138 PSF | 161 PSF |
| | | 3.5" | 6.5" | 13'-6" | 122 PSF | 211 PSF | 202 PSF | 141 PSF | 98 PSF | 169 PSF | 236 PSF |
| | | 4" | 7" | 13'-0" | 144 PSF | 254 PSF | 246 PSF | 172 PSF | 115 PSF | 203 PSF | 286 PSF |
| | | 4.5" | 7.5" | 12'-6" | 168 PSF | 285 PSF | 297 PSF | 208 PSF | 134 PSF | 228 PSF | 340 PSF |

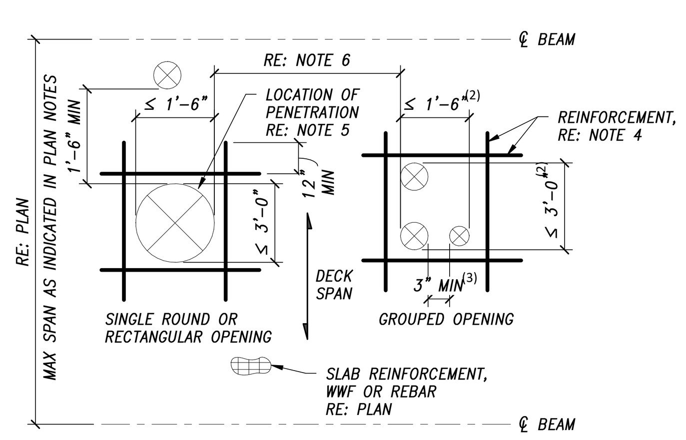


NOTES:

1. ISOLATED PENETRATIONS ≤6" DO NOT REQUIRE ADDITIONAL REINFORCEMENT.
2. PENETRATIONS WHERE THE CLEAR SPACING IS LESS THAN THE DIAMETER OF THE LARGER OF THE TWO ARE CONSIDERED TO FORM A GROUPED OPENING.
3. WHERE PENETRATIONS ARE INDIVIDUALLY BLOCKED OUT, PROVIDE 3" MIN BETWEEN PENETRATIONS. NO SPACING MINIMUM IF GROUP BLOCKOUT IS PROVIDED.
4. WHERE SLAB REINFORCEMENT IS WWF, PROVIDE #4x4'-0" MIN EA SIDE OF OPENING, CHAIR REINFORCEMENT TO 1" CLEAR FROM TOP OF SLAB WHERE SLAB REINFORCEMENT IS REBAR, NO ADDNL REINFORCEMENT IS REQUIRED.
5. PENETRATION MAY BE LOCATED AT ANY POINT ALONG DECK SPAN. PROVIDE A MINIMUM OF 3" BETWEEN EDGE OF PENETRATION AND BEAM FLANGE.
6. PROVIDE A MINIMUM CLEAR SPACING OF 3 TIMES THE AVERAGE OF ADJACENT PENETRATIONS PERPENDICULAR TO THE DECK SPAN. (IE FOR ADJACENT 12" OPENING AND 6" OPENING, PROVIDE 2'-3" CLEAR.)
7. SPACE NON-GROUPED PENETRATIONS PARALLEL TO THE DECK SPAN A MINIMUM OF 1'-6" APART.
8. BLOCKOUT SLAB AT OPENING. REMOVE DECK AT OPENING AFTER CONCRETE HAS REACHED 75% f'c.

## 8 TYPICAL SMALL COMPOSITE DECK OPENINGS
NTS

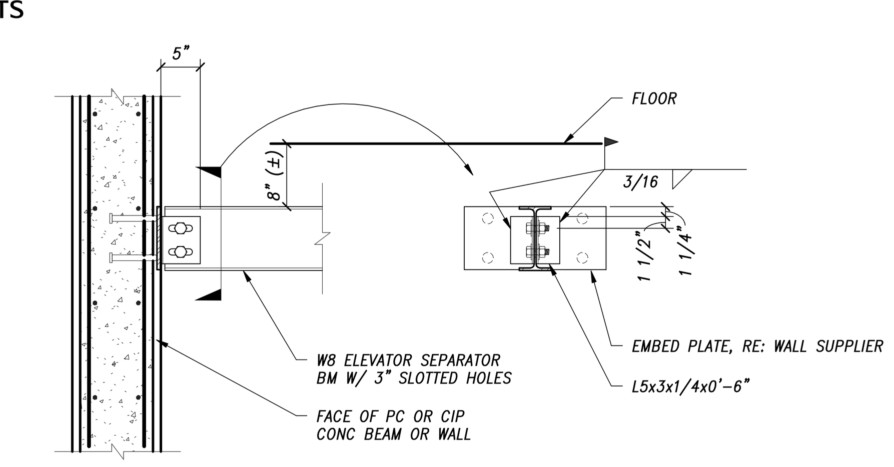


## 7 TYPICAL ELEVATOR SEPARATOR BEAM CONNECTION AT CONCRETE WALL OR BEAM
NTS

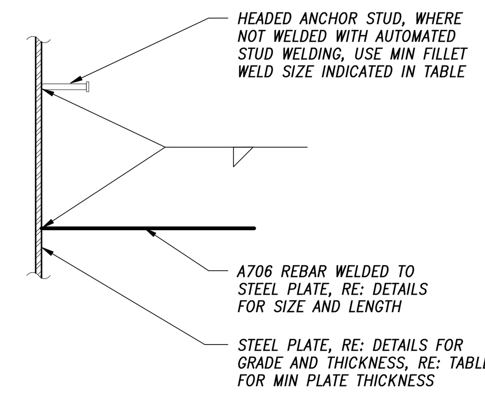


| BAR SIZE | MIN WELD SIZE Tw | MIN PLATE THICKNESS GRADE 36 | MIN PLATE THICKNESS GRADE 50 |
|---|---|---|---|
| #3 | 3/16 | 1/4 | 1/4 |
| #4 | 1/4 | 1/4 | 1/4 |
| #5 | 5/16 | 1/4 | 1/4 |
| #6 | 3/8 | 5/16 | 1/4 |
| #7 | 7/16 | 3/8 | 5/16 |
| #8 | 1/2 | 7/16 | 5/16 |
| #9 | 9/16 | 1/2 | 3/8 |
| #10 | 5/8 | 1/2 | 3/8 |
| #11 | 11/16 | 9/16 | 7/16 |

NOTES:

1. REBAR IS GRADE 60 ASTM A706
2. WELDING ELECTRODES ARE E70 KSI MINIMUM
3. FOLLOW ALL REQUIREMENTS OF AWS D1.4 – STRUCTURAL WELDING CODE FOR REINFORCING STEEL
4. WELD SIZE AND MINIMUM PLATE THICKNESS DEVELOPS STRENGTH OF REINFORCEMENT
5. DEFORMED BAR ANCHORS (DBA) SHALL USE WELDS INDICATED WHERE NOT WELDED BY AUTOMATED WELDING PROCEDURE

## 6 TYPICAL REBAR WELDED TO STEEL
NTS

STIFFENER TABLE

| FLANGE WIDTH | STIFFENER THICKNESS tp1 | tw | FLANGE THICKNESS | STIFFENER THICKNESS tp2 | tw |
|---|---|---|---|---|---|
| 6" OR LESS | 3/8" | 1/4" | 1/2" OR LESS | 1/4" | 3/16" |
| > 6" TO 9" | 5/8" | 3/8" | > 1/2" TO 3/4" | 3/8" | 1/4" |
| > 9" TO 12" | 3/4" | 3/8" | > 3/4" TO 1" | 1/2" | 5/16" |
| > 12" TO 15" | 1" | 3/8" | > 1" TO 1 1/4" | 5/8" | 3/8" |
| > 15" | SPECIAL DESIGN REQUIRED | | > 1 1/4" | SPECIAL DESIGN REQUIRED | |

STIFFENER THICKNESS SHALL BE THE MAXIMUM VALUE OF tp1 OR tp2 LISTED ABOVE BASED ON BEAM GEOMETRY

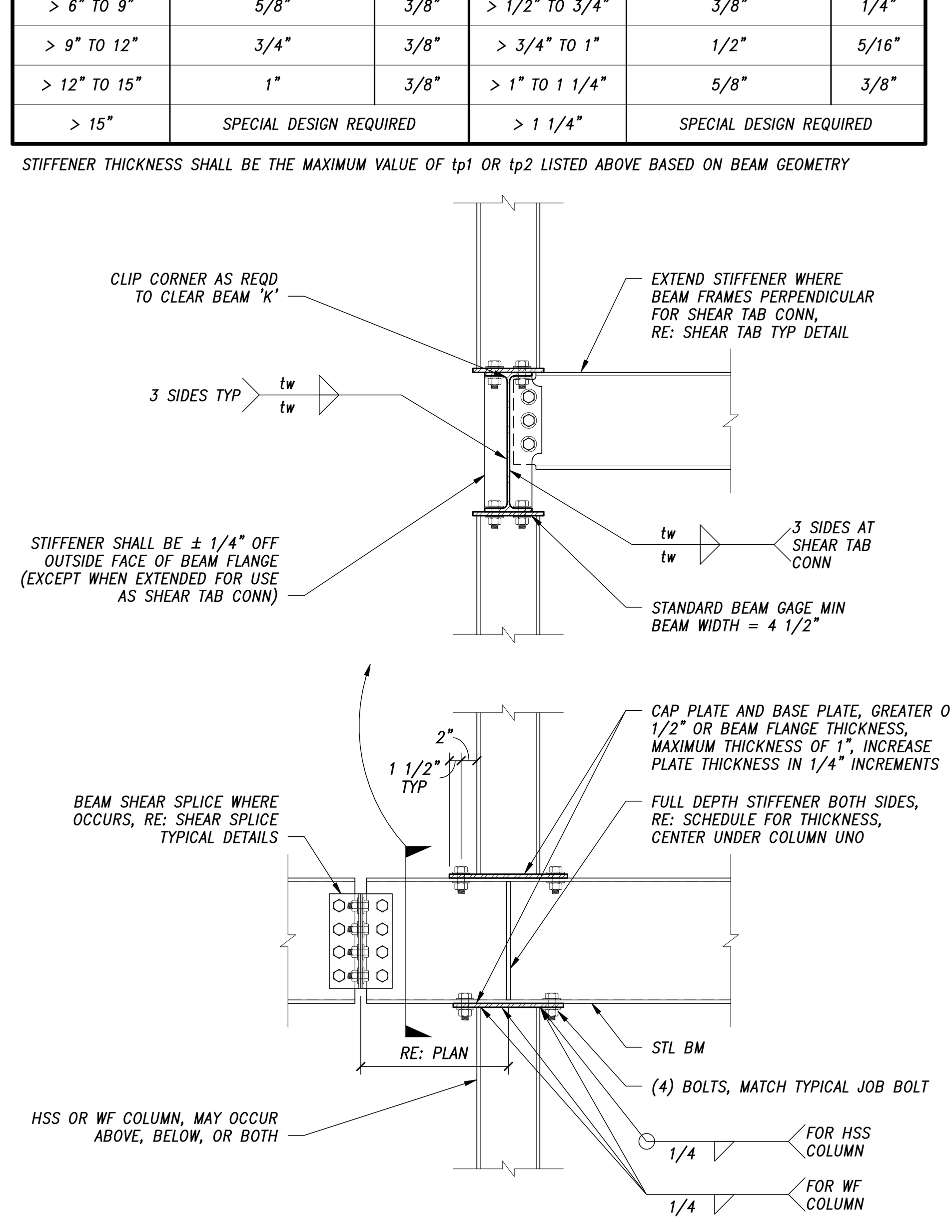


## 5 TYPICAL BEAM STIFFENERS AT COLUMNS
NTS

STRENGTH TRANSFER COLUMN LOADS (LRFD)

| | | COL ABOVE | | | |
|---|---|---|---|---|---|
| | | HSS 4x4 | HSS 5x5 | HSS 6x6 | HSS 8x8 |
| COL BELOW | HSS 6x6 | 180K | | | |
| | HSS 8x8 | 120K | 180K | 230K | |
| | HSS 10x10 | 90K | 120K | 160K | 280K |

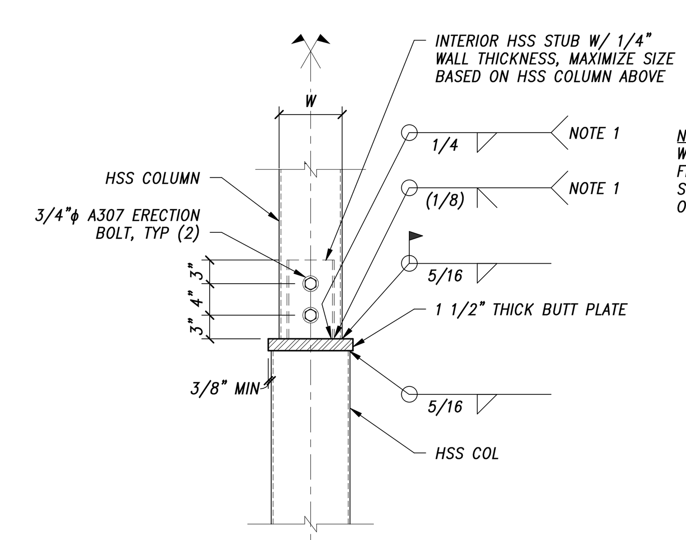


NOTE 1:
WELD INSIDE OF HSS STUB WITH FILLET WELD, OR OUTSIDE OF HSS STUB WITH BEVEL WELD. ONLY ONE TYPE OF WELD IS REQUIRED.

## 4 TYPICAL HSS COLUMN SPLICE
NTS

TYPICAL DETAIL SHEET NOTES

1. It is the contractor's responsibility to understand the typical details on this sheet and apply them as needed on the project.
2. Typical details on this sheet are generally not referenced from any other drawing on the project.
3. Typical details on this sheet MAY be referenced on plans or details to clarify or identify a particular condition. The presence of such a reference does not alter the obligation of the contractor to apply the detail(s) as needed even if they are not referenced.

TYPICAL REINFORCING AT ROOF DECK PENETRATIONS
(APPLIES TO METAL DECK ROOFS ONLY)

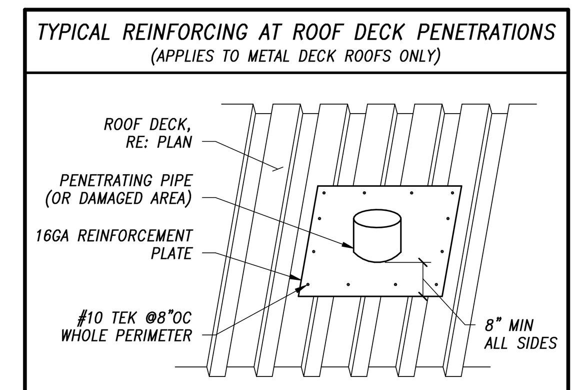


NOTES:

1. DECK REINFORCING TO BE USED FOR ALL PENETRATIONS LARGER THAN OR EQUAL TO 6" ROUND OR SQUARE BUT LESS THAN 1'-0" ROUND OR SQUARE.
2. FOR PENETRATIONS OR DECK DAMAGE LARGER THAN 1'-0" ROUND OR SQUARE, REINFORCE WITH ANGLE FRAMES. RE: TYPICAL DETAILS.
3. PENETRATIONS OR DAMAGE LESS THAN 6" ROUND OR SQUARE NEED NOT BE REINFORCED.

## 3 TYPICAL REINFORCEMENT AT ROOF DECK PENETRATIONS
NTS

TYPICAL FRAMING AROUND ROOF OPENINGS
(APPLIES TO METAL DECK ROOFS ONLY)

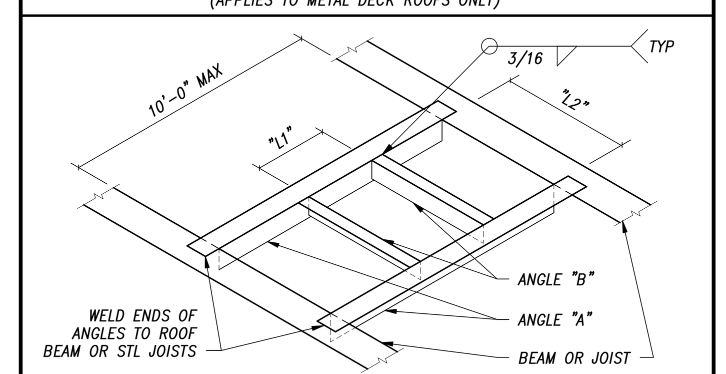


| "L1" OR "L2" (USE LARGER VALUE) | ANGLE "A" | ANGLE "B" |
|---|---|---|
| UP TO 2'-0" | 4x3x1/4 (LLV) | 4x3x1/4 (LLV) |
| UP TO 4'-0" | 5x3x1/4 (LLV) | 5x3x1/4 (LLV) |
| UP TO 6'-0" | 5x3x5/16 (LLV) | 5x3x5/16 (LLV) |
| UP TO 8'-0" | 6x4x5/16 (LLV) | 6x4x5/16 (LLV) |
| UP TO 10'-0" | 6x4x3/8 (LLV) | 6x4x3/8 (LLV) |

NOTES:

1. USE ABOVE FRAMING AT ALL ROOF OPENINGS WHERE EITHER "L1" OR "L2" EXCEEDS 12", UNLESS NOTED OTHERWISE.
2. FOR PENETRATIONS < 12" ROUND OR SQUARE, RE: TYPICAL REINFORCING AT ROOF DECK PENETRATIONS DETAIL.
3. OBTAIN LOCATIONS AND DIMENSIONS OF MEP OPENINGS FROM MEP CONTRACTORS – MAX UNIT WEIGHT = 4,000 LBS

## 2 TYPICAL FRAMING AT ROOF OPENINGS
NTS

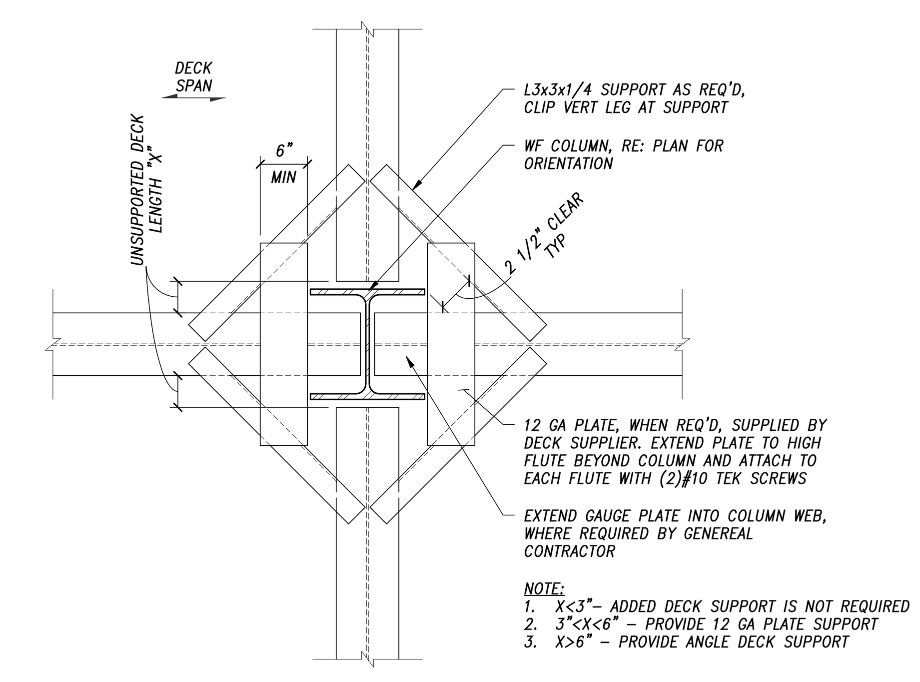


NOTE:

1. X<3"– ADDED DECK SUPPORT IS NOT REQUIRED
2. 3"<X<6" – PROVIDE 12 GA PLATE SUPPORT
3. X>6" – PROVIDE ANGLE DECK SUPPORT

NOTES:

1. INTERIOR COLUMN SHOWN. EXTERIOR COLUMNS ARE SIMILAR.
2. DECK SUPPLIER MAY SUBMIT ALTERNATE METHODS OF DECK SUPPORT FOR APPROVAL. SUPPORT MUST CARRY CONSTRUCTION LOADS.

## 1 TYPICAL COMPOSITE DECK SUPPORT AT COLUMNS
NTS

THE STRUCTURAL ENGINEERS SEAL ON THIS DRAWING INDICATES THAT THE INFORMATION SHOWN AND THE CALCULATIONS PERTAINING TO THAT INFORMATION HAVE BEEN PREPARED BY QUALIFIED PEOPLE UNDER THE DIRECTION OF THE ENGINEER-OF-RECORD. THE SEAL DOES NOT IMPLY RESPONSIBILITY FOR INFORMATION PREPARED BY OTHERS NOR FOR ANY INFORMATION NOT SHOWN ON THIS DRAWING AND SUCH RESPONSIBILITY IS SPECIFICALLY DISCLAIMED. ON PHASED PROJECTS, DRAWINGS THAT ARE ISSUED BUT NOT SEALED SHALL BE CONSIDERED TO BE PRELIMINARY IN NATURE AND ARE ISSUED FOR INFORMATION ONLY.

THESE DRAWINGS ARE TO BE USED IN CONJUNCTION WITH THE ARCHITECTURAL DRAWINGS ON THE PROJECT TO CLEARLY DEFINE ALL OF THE REQUIREMENTS FOR THE CONSTRUCTION. WHERE CONFLICTS OCCUR CONTACT ARCHITECT FOR CLARIFICATION.

OZ ARCHITECTURE
3003 Larimer Street
Denver, Colorado 80205
phone 303.861.5704
www.ozarch.com

KL&A Engineers & Builders
421 E. 4th Street
Loveland, Colorado 80537
P: (970) 667 2426 F: (970) 667 2493
Buffalo, WY ○ Carbondale, CO ○ Golden, CO ○ Loveland, CO

© 2020 KL&A, INC

ONE RIVER RUN
75 HUNKI DORI CT.
KEYSTONE, CO 80435

PROJ. NO. 117033.00
DRAWN: KL&A
CHECKED: JLM
APPROVED: JLM
DATE: 2020-06-25

© OZ ARCHITECTURE

ONE RIVER RUN

ISSUED FOR:
Issue for Permit/Issue for Construction

SHEET TITLE:
TYPICAL DETAILS

SCALE: As indicated
SHEET NUMBER
S-014

C:\Revit Local Files\K1498_ORR_RVT19_DJohnson-Hazlewood.rvt
6/22/2020 4:47:37 PM